STATE	PROJECT NUMBER	SHEET NO.	TOTAL SHEETS
GA.	CM-575-K(34)	107	113

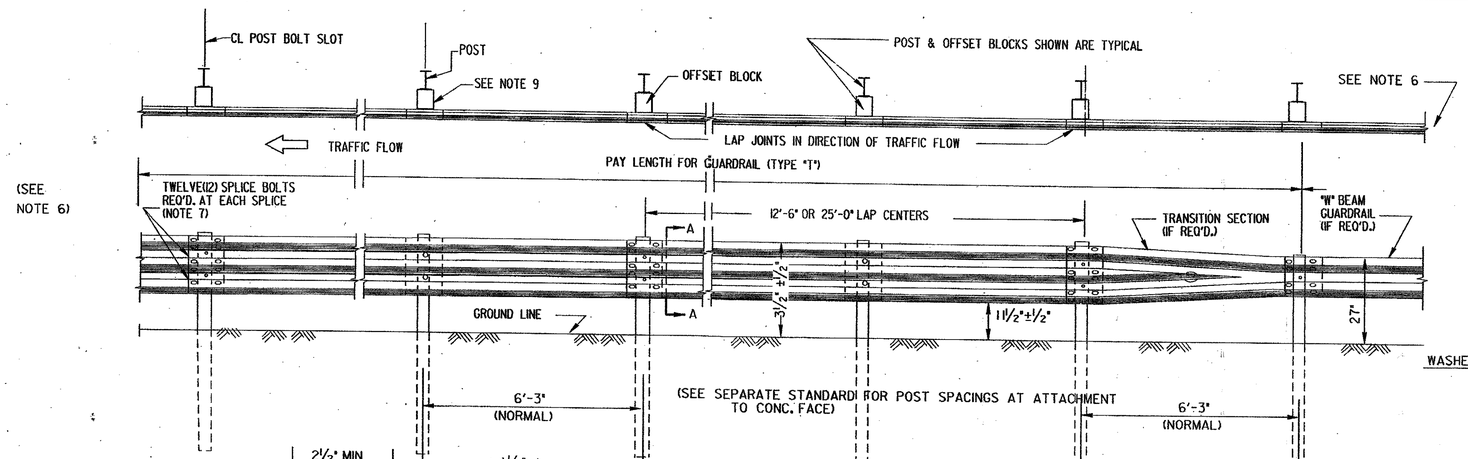

NOTE:
WHERE ATTACHED TO CONCRETE BARRIER, BRIDGE END POST OR OTHER CONCRETE FACE, PAYMENT FOR T BEAM GUARDRAIL SHALL INCLUDE ADDITIONAL POSTS, OFFSET BLOCKS AND DOUBLE THICKNESS (ONE RAIL NESTED INSIDE ANOTHER) SECTION OF T BEAM GUARDRAIL AS SPECIFIED.

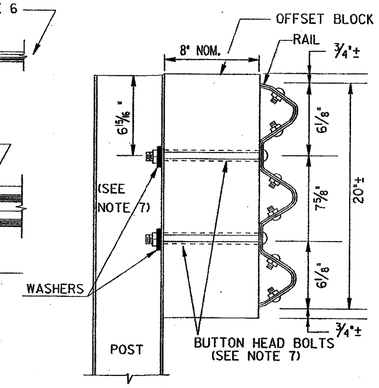

SECTIONAL VIEW
(GUARDRAIL TP. T-LIN. FT.)

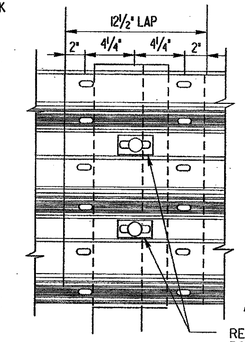

"T" BEAM SPLICE AT POST

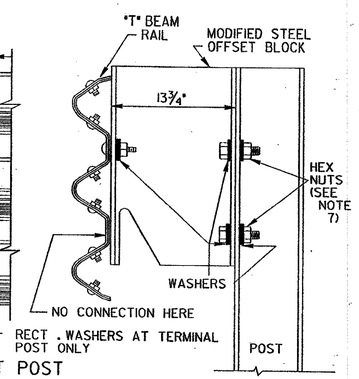

SECTIONAL VIEW
(GUARDRAIL TP. T, MODIFIED OFFSET BLOCKS -LIN. FT.)

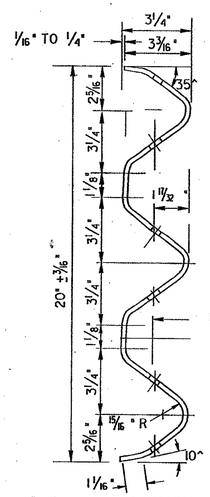

SECTION THROUGH RAIL ELEMENT (SEC. A-A)

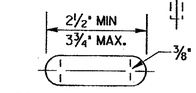

ERECTING BOLT SLOT

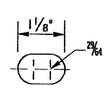

SPLICE BOLT SLOT

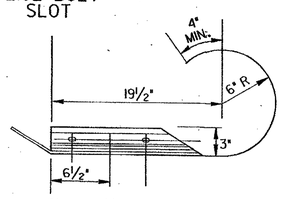

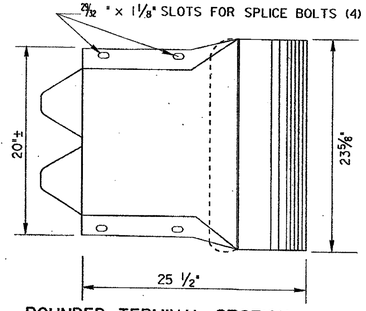

ROUNDED TERMINAL SECTION
TO BE LAPPPED ON TRAFFIC FACE OF RAIL WHERE TYPE I ANCHORAGE IS REQUIRED

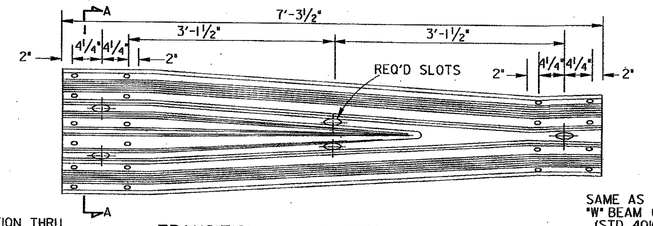

SAME AS SECTION THRU "T" BEAM RAIL ELEMENT

TRANSITION SECTION

SAME AS SECTION THRU "W" BEAM GUARDRAIL (STD. 4010)

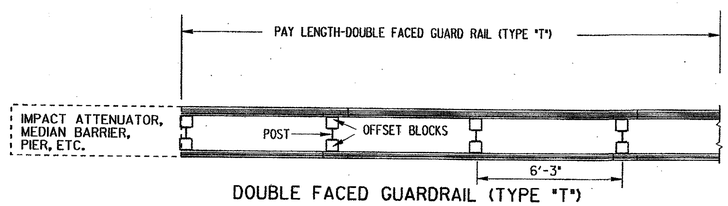

DOUBLE FACED GUARDRAIL (TYPE "T")

GENERAL NOTES:

1. SPECIFICATIONS: GA. STANDARD CURRENT EDITION & SUPPLEMENTS THERETO
2. DIMENSIONS ARE SUBJECT TO MANUFACTURING TOLERANCES.
3. NET LENGTH OF RAIL ELEMENTS MAY BE EITHER 12'-6" OR 25'-0".
4. RAIL ELEMENTS ON CURVES OF RADII LESS THAN 150' WILL BE PRECURVED.
5. PAYMENT FOR GUARDRAIL (TYPE "T") WILL INCLUDE ALL POSTS, BLOCKS, HARDEWARE ACCESSORIES AND WHERE REQUIRED ALL ADDITIONAL POSTS, END SHOES, TERMINAL SECTIONS, TRANSITION SECTIONS, BACK-UP PLATES AND REMOVAL AND REPLACEMENT OF PORTIONS OF MEDIAN PAVING, SPILLWAYS OR CATCH BASINS WHERE NECESSARY.
6. ALL GUARDRAIL TERMINALS SHALL REQUIRE AN APPROVED ANCHORAGE AS SPECIFIED IN IN THE PLANS OR APPROVED BY THE ENGINEER EXCEPT WHERE CONNECTED TO A BRIDGE END OR OTHER CONCRETE FACE.
7. NUTS, BOLTS AND WASHERS WHICH ARE NOT DETAILED ON THIS STANDARD, SHALL BE AS SHOWN FOR W BEAM GUARDRAIL ON STANDARD 4010.
8. SEE SEPARATE STANDARDS AS APPLICABLE FOR ANCHORAGES, POSTS, OFFSET BLOCKS, CONNECTIONS TO CONCRETE FACE, W BEAM GUARDRAIL, ETC.
9. SEE STANDARD 4011-A FOR DETAILS AND REQUIREMENTS OF BACK -UP PLATES, WHERE STEEL OFFSET BLOCKS ARE ALLOWED OR SPECIFIED.
10. OFFSET BLOCKS SHALL BE PLASTIC UNLESS OTHERWISE APPROVED OR SPECIFIED.

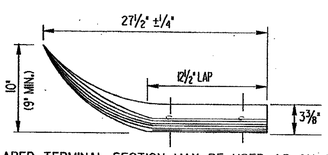

THE FLARED TERMINAL SECTION MAY BE USED AS AN ALTERNATE TO THE ROUND TERMINAL SECTION.

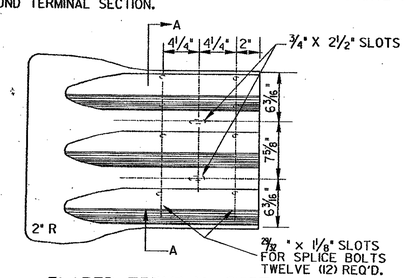

FLARED TERMINAL SECTION

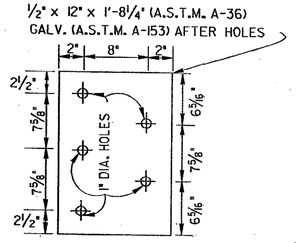

½" GALVANIZED STEEL PLATE
(FOR USE WITH END SHOE CONN.)
ALTERNATE: FIVE 3" x ½" x 3" GALV. PLATES WITH 1" DIA. HOLE CENTERED, GALV. AFTER HOLES.

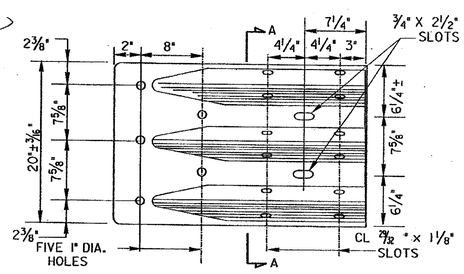

"T" BEAM SPECIAL END SHOE

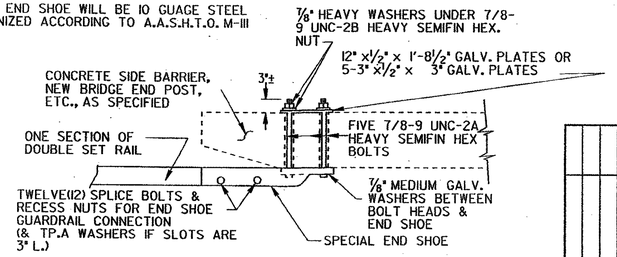

TYPICAL SPECIAL END SHOE CONNECTION
NOTE: THE "T" BEAM RAIL ELEMENT/END SHOE SPLICE SHALL BE LAPPED IN THE DIRECTION OF THE NEAREST TRAFFIC.

		DATE	DEPARTMENT OF TRANSPORTATION STATE OF GEORGIA
		REVISION	STANDARD "T" BEAM GUARDRAIL
			NO SCALE — REV. & REDR. NOV., 1999
		BY	DES. & REV. ____ REDR. ____ CHK. ____ (SUBMITTED) STATE ROAD & AIRPORT DESIGN ENGR. (APPROVED) CHIEF ENGINEER
			NUMBER 4270