FILL SECTION

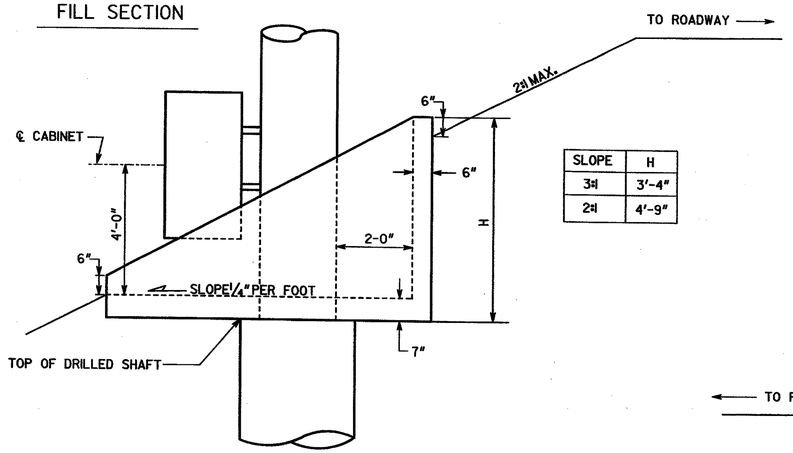

SLOPE	H
3:1	3'-4"
2:1	4'-9"

CUT SECTION

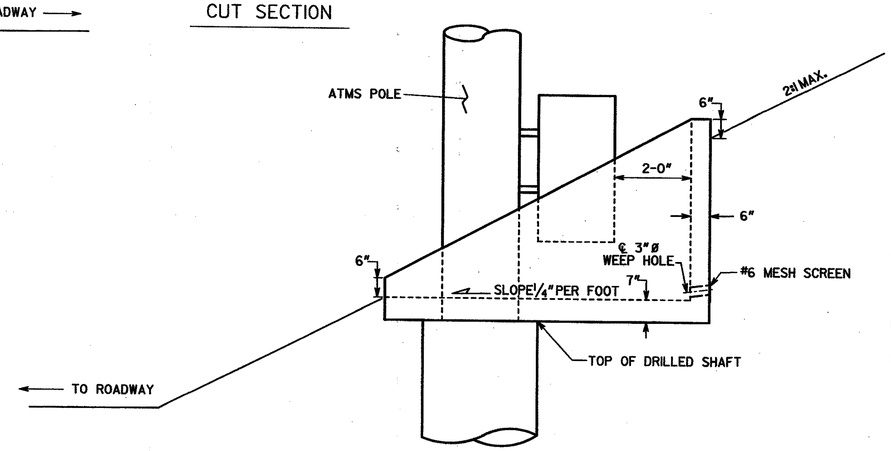

DESIGN DATA

SPECIFICATIONS	AASHTO 2002
CONCRETE	CLASS A, f'_c = 3,000 PSI
REINFORCEMENT STEEL	GRADE 60, f_y = 60,000 PSI
DESIGN SOIL PRESSURE	3 KSF
COHESION	0
ANGLE OF INTERNAL FRICTION	28°
UNIT WEIGHT	110 PCF
COEFFICIENT OF SLIDING FRICTION	0.45

GENERAL NOTES

SPECIFICATIONS - GEORGIA STANDARD SPECIFICATIONS, 2001 EDITION, AS MODIFIED BY CONTRACT DOCUMENTS.

REINFORCING STEEL - ALL REINFORCING STEEL SHALL BE PLACED AND TIED IN ACCORDANCE WITH THE GEORGIA DOT SPECIFICATIONS. WELDING OF REINFORCING STEEL WILL NOT BE PERMITTED.

FINISH - EXPOSED SURFACES OF THE WALL SHALL RECEIVE A TYPE III FINISH.

CONCRETE COVER - MAINTAIN 3" COVER ON ALL FOOTING REINFORCING AND 2" COVER ON ALL STEM REINFORCING.

INCIDENTAL ITEMS - COST INCIDENTAL TO THE WORK THAT IS NOT SPECIFICALLY COVERED BY THE GEORGIA STANDARD SPECIFICATIONS, SUPPLEMENTAL SPECIFICATIONS AND/OR SPECIAL PROVISIONS SHALL BE INCLUDED IN THE OVERALL BID SUBMITTED. THIS INCLUDES THE COST OF JOINT FILLERS, AND OTHER INCIDENTAL ITEMS NECESSARY TO COMPLETE THE WORK.

* -FIELD CUT TO CLEAR ATMS POLE

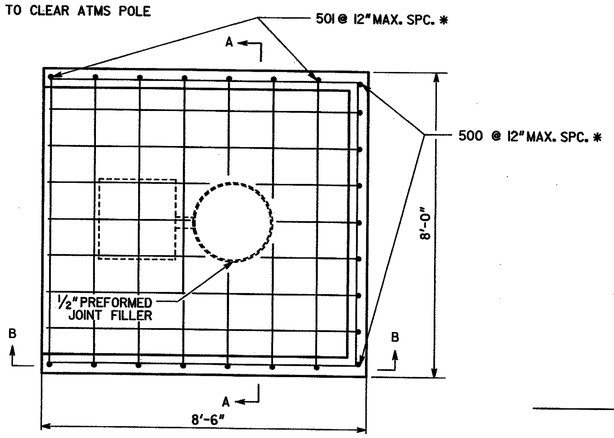

PLAN

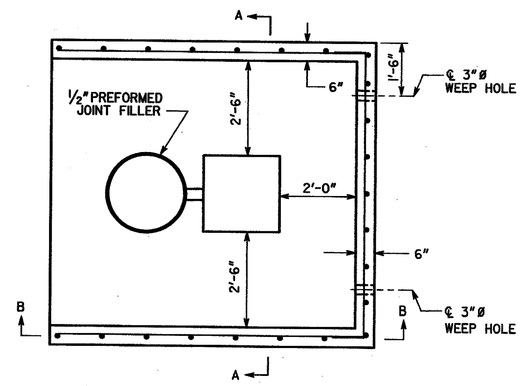

PLAN

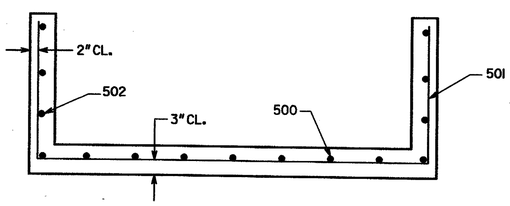

SECTION A-A

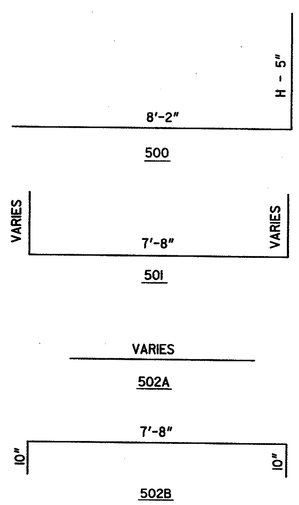

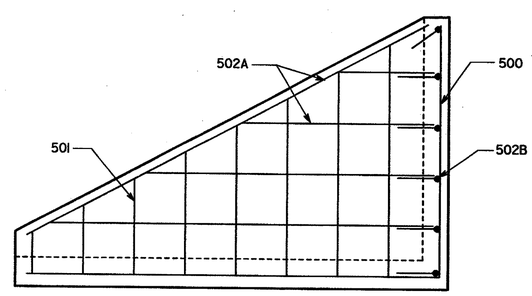

SECTION B-B

SUMMARY OF QUANTITIES

PAY ITEM NUMBER	QUANTITY	UNIT	PAY ITEM
500-3107	3	CY	CLASS A CONCRETE, RETAINING WALL
511-1000	320	LB	BAR REINFORCING STEEL

NOTE: QUANTITIES SHOWN ASSUME A 2:1 SLOPE

GRESHAM SMITH AND PARTNERS

GS&P

GEORGIA DEPARTMENT OF TRANSPORTATION

- NO SCALE -

REVISION DATES

STATE OF GEORGIA
DEPARTMENT OF TRANSPORTATION
OFFICE: BRIDGE DESIGN

ATMS PLANS

PLATFORM DETAILS

JUNE 2005

DESIGNED DDF	CHECKED SWW	REVIEWED HSL	DRAWING No.
DRAWN DDF	DESIGN GROUP SWW	APPROVED PLV	40-8