STATE	PROJECT NUMBER	SHEET NO.	TOTAL SHEETS
GA.	IM-00MS (257)	7	27

Metric

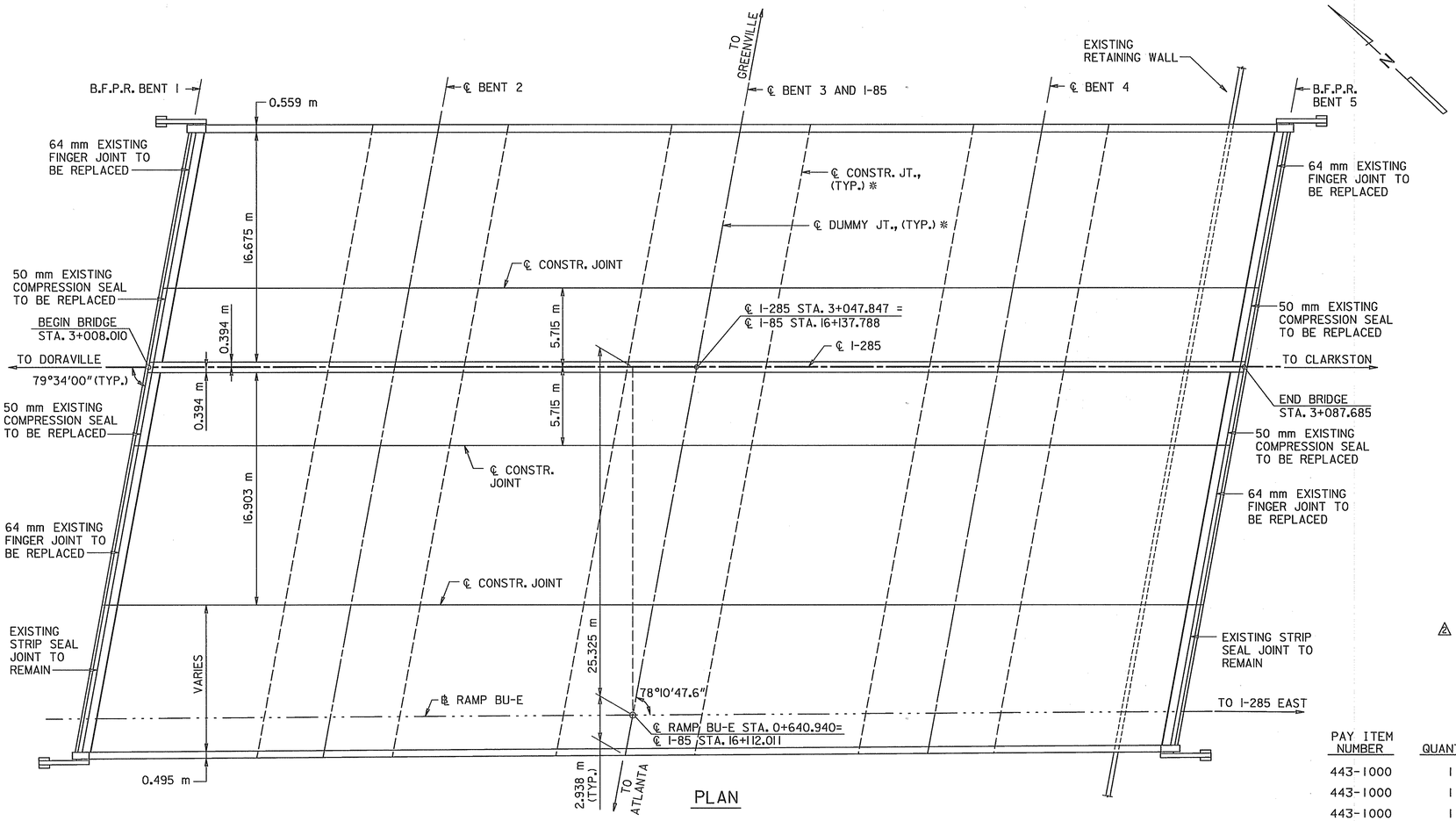

PLAN

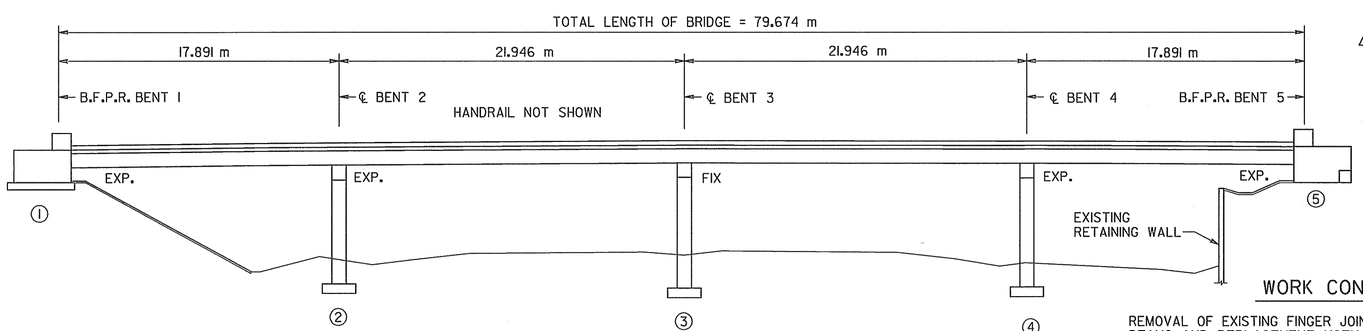

ELEVATION

GENERAL NOTES

METRIC PLANS - THESE PLANS ARE DETAILED USING THE METRIC (SI) SYSTEM OF UNITS. DIMENSIONS SHOWN IN THE PLANS ARE IN MILLIMETERS (mm) UNLESS OTHERWISE NOTED. ELEVATIONS ARE IN METERS. REINFORCING BARS IN METRIC SIZE DESIGNATIONS SHOWN SHALL BE PROVIDED AS PER ASTM A 615M. IN THE BAR MARK, THE FIRST TWO DIGITS ARE THE METRIC SIZE (I.E., BAR #1314 IS A NO. #13 METRIC SIZE BAR).

SPECIFICATIONS- GEORGIA STANDARD SPECIFICATIONS, 1995 METRIC EDITION, AS MODIFIED BY CONTRACT DOCUMENTS.

REINFORCING STEEL - ALL REINFORCING STEEL SHALL BE PLACED AND TIED IN ACCORDANCE WITH THE GEORGIA STANDARD SPECIFICATIONS. WELDING OF REINFORCING STEEL WILL NOT BE PERMITTED.

TRAFFIC CONTROLS - SEE SPECIAL PROVISIONS AND MAINTAINANCE OF TRAFFIC PLANS FOR REQUIRED TRAFFIC CONTROLS AND TRAFFIC CONTROL PAYMENT.

EXISTING BRIDGE PLANS - PLANS FOR THE EXISTING BRIDGE MAY BE PURCHASED BY CONTACTING THE PLANS REPRODUCTION OFFICE AT (404) 656-5401. THE EXISTING BRIDGE WAS BUILT UNDER G.D.O.T. PROJECT NUMBER I-407-1(5) AND WIDENED UNDER G.D.O.T. PROJECT NUMBER I-285-1(103)101CT2 DEKALB COUNTY.

EXISTING FINGER JOINTS - EXISTING FINGER JOINTS AND COMPRESSION SEALS SHALL BE REMOVED AND REPLACED WITH ELASTOMERIC PROFILE BRIDGE DECK JOINT SEALS, SEE SPECIAL PROVISION 443.

EXISTING BRIDGE JOINTS - EXISTING BRIDGE TRANSVERSE CONSTRUCTION AND DUMMY JOINTS SHALL BE CLEANED OF ALL DIRT, REFUSE, AND EXISTING SEALANT AND SEALED USING BOND BREAKER AND SILICONE SEALANT (TYPE D) AS PER SUB-SECTION 461.03 OF THE GEORGIA STANDARD SPECIFICATIONS. COST OF MATERIALS AND INSTALLATION SHALL BE INCLUDED IN THE OVERAL BID SUBMITTED.

WELDING CERTIFICATION - ALL WELDING ON GEORGIA D.O.T. PROJECTS SHALL BE PERFORMED BY CERTIFIED WELDERS THAT HAVE IN THEIR POSSESSION A CURRENT WELDING CERTIFICATION CARD ISSUED BY THE GEORGIA D.O.T. OFFICE OF MATERIALS AND RESEARCH. ONLY E70XX (EXCLUDING E7014 AND E7024) LOW HYDROGEN ELECTRODES SHALL BE USED FOR MANUAL SHIELDED METAL ARC WELDING.

SALVAGE MATERIAL - NO MATERIAL REMOVED FROM THE EXISTING STRUCTURES SHALL BE SALVAGED FOR USE BY THE GEORGIA DEPARTMENT OF TRANSPORTATION.

INCIDENTAL ITEMS - COST INCIDENTAL TO THE WORK THAT IS NOT SPECIFICALLY COVERED BY THE GEORGIA STANDARD SPECIFICATIONS, SUPPLEMENTAL SPECIFICATIONS, AND/OR SPECIAL PROVISIONS SHALL BE INCLUDED IN THE OVERALL BID SUBMITTED. THIS INCLUDES THE COST OF CLEANING AND BENDING EXISTING REINFORCEMENT, EPOXY RESIN ADHESIVE, DRILLING HOLES IN EXISTING BEAMS, AND OTHER ITEMS NECESSARY TO COMPLETE THE WORK.

△5 REMOVAL OF PARTS OF EXISTING BRIDGE - COST OF REMOVAL, RECONSTRUCTION, AND MODIFICATION OF THE EDGE BEAMS SHALL BE INCLUDED IN THE PRICE BID FOR ITEM 540 REMOVAL OF PARTS OF EXISTING BRIDGE.

SHOP DRAWINGS - ALL SHOP DRAWINGS FOR THIS BRIDGE SHALL BE DETAILED IN THE METRIC (SI) SYSTEM OF UNITS.

SUMMARY OF QUANTITIES

PAY ITEM NUMBER	QUANTITY	UNIT	PAY ITEM
443-1000	1	EA	ELASTOMERIC PROFILE BRIDGE JOINT SEALS, BENT NO - 1L, BR NO - 1
443-1000	1	EA	ELASTOMERIC PROFILE BRIDGE JOINT SEALS, BENT NO - 1R, BR NO - 1
443-1000	1	EA	ELASTOMERIC PROFILE BRIDGE JOINT SEALS, BENT NO - 5L, BR NO - 1
443-1000	1	EA	ELASTOMERIC PROFILE BRIDGE JOINT SEALS, BENT NO - 5R, BR NO - 1
△5 △1 504-0600	17	m^3	TWENTY-FOUR HOUR ACCELERATED STRENGTH CONCRETE, BR NO - 1
511-3000	LUMP	LS	SUPERSTR REINF STEEL, BR NO - 1 (2400)
△5 540-1202	LUMP	LS	REMOVAL OF PARTS OF EXISTING BR, BR NO - 1

EXISTING BRIDGE SERIAL NO. 089-0077-0
EXISTING BRIDGE ID NO. 089-0040D-032.70C
PROJECT PI NO. 713940

BRIDGE NO. 1

WORK CONSISTS OF

REMOVAL OF EXISTING FINGER JOINTS, COMPRESSION SEALS, AND EDGE BEAMS AND REPLACEMENT WITH NEW CONCRETE EDGE BEAMS AND AND NEW DECK JOINTS. CLEAN AND RESEAL OTHER DECK JOINTS.

DESIGN DATA FOR EDGE BEAMS

SPECIFICATIONS ..... AASHTO 1996
TYPICAL MS-18 AND/OR MILITARY LOADING ..... IMPACT ALLOWED
FUTURE PAVING ALLOWANCE ..... 1.44 kN/m^2
△5 24 HOUR ACCELERATED CONCRETE ..... f'c = 25 MPa
REINFORCEMENT STEEL ..... GRADE 420, fy = 420 MPa

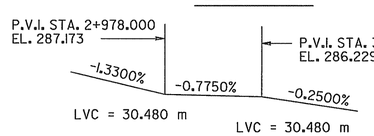

I-285 PROFILE GRADE LINE
(FROM EXISTING BRIDGE PLANS)

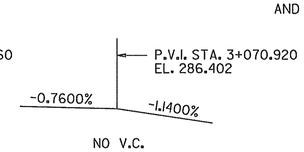

LEFT BRIDGE GRADE DATA
(FROM EXISTING BRIDGE PLANS)

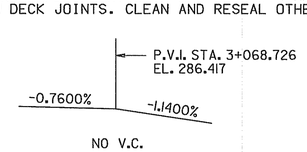

RIGHT BRIDGE GRADE DATA
(FROM EXISTING BRIDGE PLANS)

GEORGIA REGISTERED No. 16615 PROFESSIONAL ENGINEER PAUL L. POWELL, JR.
01-12-00

BRIDGE SHEET 1 OF 4

BY	REVISIONS	DATE
GLE	PAY ITEM	1-04-00
GLE	PAY ITEM AND NOTES	9-13-99
GLE	PAY ITEM	7-1-99

J.B. TRIMBLE, INC.
5075 Roswell Rd.
Atlanta GA 30342
(404) 843-8171

GEORGIA
DEPARTMENT OF TRANSPORTATION
OPERATIONS DIVISION-OFFICE OF MAINTENANCE

DISTRICT 7 BRIDGE REPAIRS
(JOINT REPLACEMENT)
I-285 OVER I-85

DEKALB CO. IM-00MS (257)

SCALE: NONE JUNE 1999

DESIGNED GLE CHECKED SLP REVIEWED EHG
DRAWN ITD DESIGN GROUP MAINTENANCE APPROVED STH

C:\DGN\8923\CT5\GDM5- IPE.DGN 1-11-00 ITD