R-142

STATE	PROJECT NUMBER	SHEET NO.	TOTAL SHEETS
GA.	IM-STP-00MS(265)	77	198

LOCATION	NO. OF LOC.	MARK	LENGTH mm	NO. BARS REQ'D.	TYPE	A	G	B mm	C mm	D mm	E mm	F mm	H mm	J mm	K mm	N	θ
BENTS 1 & 5	2																
		1305	1640	51	25	4	4	370	335								
		1306A	5200	2	60												
		1306B	5200	2	61												
		2500A	4510	3	60												
		2500B	4510	3	61												
		2506A	5200	3	60												
		2506B	5200	3	61												

* SEAL AS PER SPECIAL PROVISION SECTION 449.

⊛ SIZE OF JOINT OPENING AT 15° C

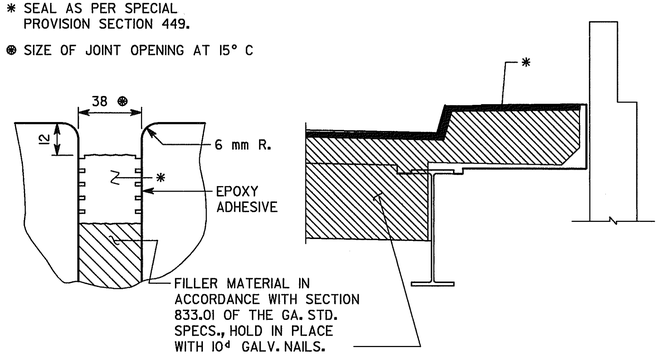

LONGITUDINAL SECTION

TRANSVERSE SECTION

EXPANSION JOINT DETAIL "A" AT BENTS 1 & 5

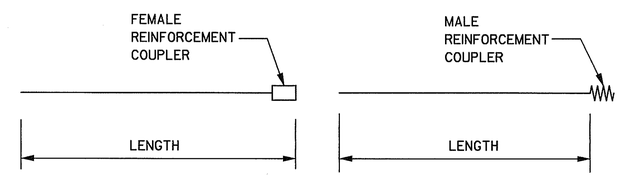

TYPE 60

TYPE 61

NOTE: REINFORCEMENT STEEL COUPLERS SHALL BE THREADED TYPE "RICHMOND SCREW ANCHOR CO., INC. DOWEL BAR SUBSTITUTION AND SPLICER SYSTEM" OR "ENRICO PRODUCTS, INC. LENTON STANDARD COUPLER" OR EQUAL AS APPROVED BY THE ENGINEER. COST OF REINFORCEMENT STEEL COUPLERS SHALL BE INCLUDED IN THE PRICE BID FOR SUPERSTRUCTURE REINFORCING STEEL.

BRIDGE NO. 16

OPTIMA Inc.
4727 N. ROYAL ATLANTA DR., SUITE G
TUCKER, GEORGIA 30084

Heath & Lineback Engineers INCORPORATED
12 POWDER SPRINGS STREET, SUITE 240
MARIETTA, GEORGIA 30064

GEORGIA
DEPARTMENT OF TRANSPORTATION
PRECONSTRUCTION DIVISION-OFFICE OF MAINTENANCE

MISCELLANEOUS DETAILS
JOINT & EDGE BEAM REPLACEMENT ON
CLIFTON SPRINGS ROAD (C.R. 442)
OVER I-285
DEKALB COUNTY, GA. IM-STP-00MS(265)

SCALE: NO SCALE

DECEMBER 1999

DESIGNED GW
DRAWN CAD
CHECKED
DESIGN GROUP MAINTENANCE
REVIEWED
APPROVED

BY | REVISIONS | DATE

BRIDGE SHEET 4 OF 4

4/14/2008 3:45:41 PM \\GDOT-DSN1\GOPLOT\QCF\Road_Design_Tiff-18x12_to_Tiff-36x24.qcf mpitts C:\Documents and Settings\mpitts\Desktop\713920-\Construction\713920_0079.tif GO-RD-Plans-Review