STATE	PROJECT NUMBER	SHEET NO.	TOTAL SHEETS
GA.	IM-STP-00MS(265)	60	198

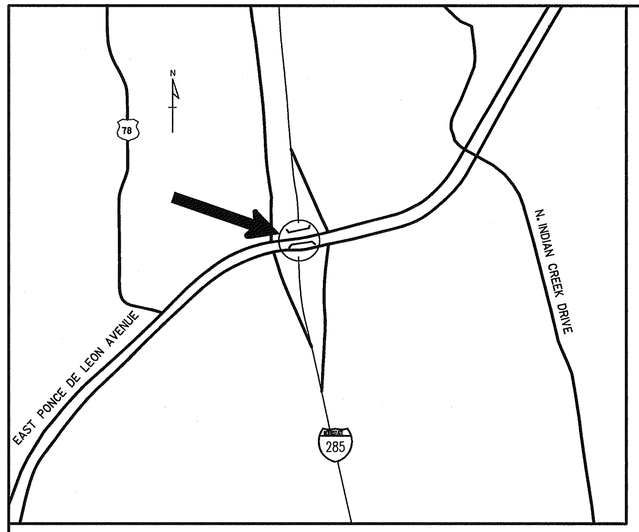

LOCATION MAP

NOTE: THE NORTH ARROW FOR THE LOCATION MAP DOES NOT MATCH THE NORTH ARROW FOR THE PLAN AND ELEVATION.

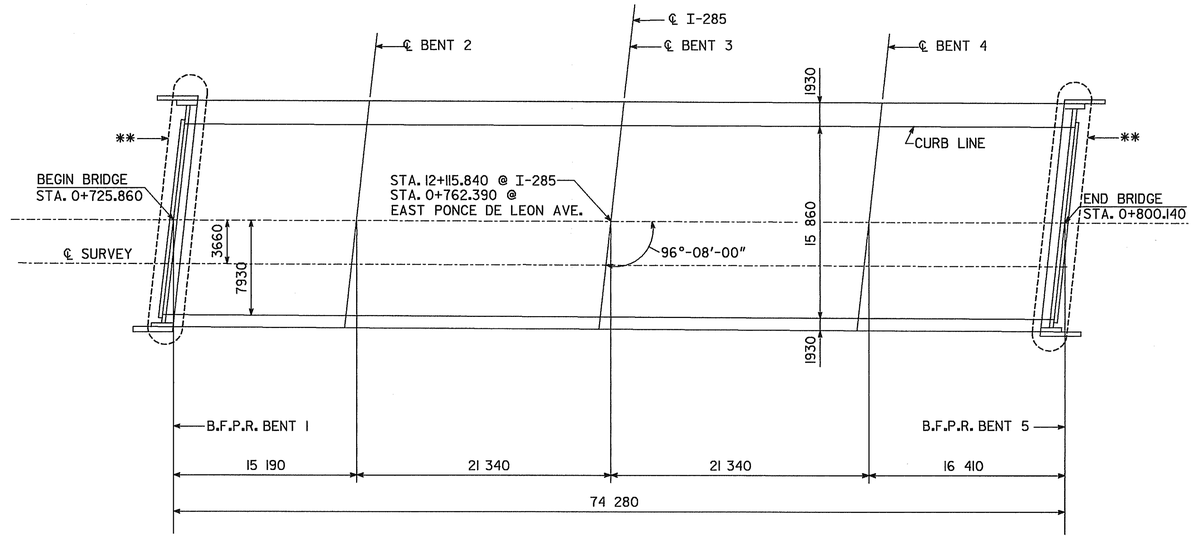

PLAN

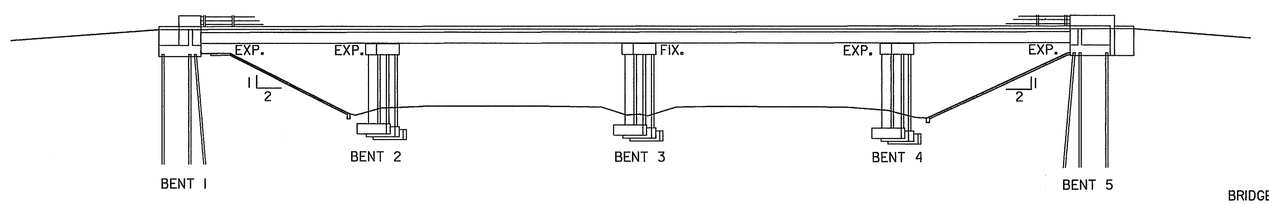

ELEVATION

BRIDGE I.D. NO. 089-09012M-004.82E
BRIDGE SERIAL NO. 089-0138-0
PROJECT P.I. NO. 713920
BRIDGE NO. 13

NOTE:
** REMOVE ARMORED JOINTS AND EDGE BEAMS AT THESE LOCATIONS AND REPLACE WITH NEW EDGE BEAMS AND JOINTS AS SHOWN IN THE PLANS.

OPTIMA Inc.
4727 N. ROYAL ATLANTA DR., SUITE G
TUCKER, GEORGIA 30084

Heath & Lineback Engineers INCORPORATED
12 POWDER SPRINGS STREET, SUITE 240
MARIETTA, GEORGIA 30064

GEORGIA
DEPARTMENT OF TRANSPORTATION
PRECONSTRUCTION DIVISION-OFFICE OF MAINTENANCE

PLAN AND ELEVATION
JOINT & EDGE BEAM REPLACEMENT ON
EAST PONCE DE LEON AVENUE (C.R. 5151)
OVER I-285

DEKALB COUNTY, GA. IM-STP-00MS(265)

SCALE: NO SCALE DECEMBER 1999

REVISIONS	BY	DATE

BRIDGE SHEET 1 OF 4

DESIGNED GW
DRAWN CAD
CHECKED
DESIGN GROUP MAINTENANCE
REVIEWED
APPROVED