STATE	PROJECT NUMBER	SHEET NO.	TOTAL SHEETS
GA.	IM-STP-00MS(265)	413	198

Metric

* SEAL AS PER SPECIAL PROVISION SECTION 449.

⊛ SIZE OF JOINT OPENING AT 15° C

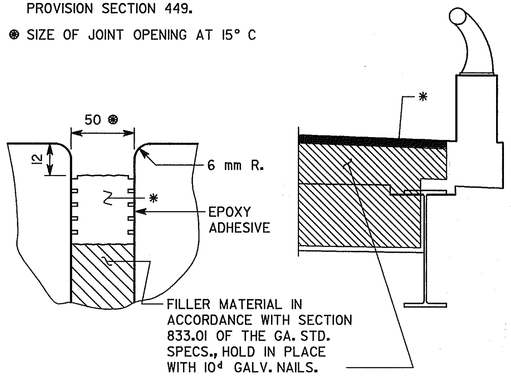

LONGITUDINAL SECTION

TRANSVERSE SECTION

EXPANSION JOINT DETAIL "A" AT BENT 2

* SEAL AS PER SPECIAL PROVISION SECTION 449.

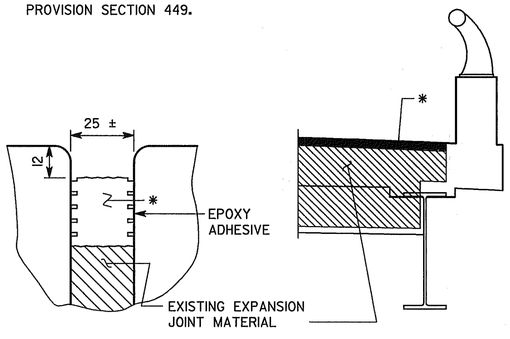

LONGITUDINAL SECTION

TRANSVERSE SECTION

RESEAL EXPANSION JOINT DETAIL AT BENTS 1, 3, & 4

LOCATION	NO. OF LOC.	MARK	LENGTH mm	NO. BARS REQ'D.	TYPE	A	G	B mm	C mm	D mm	E mm	F mm	H mm	J mm	K mm	N	θ
BENT 2	1																
		1305	1970	80	31	4	4	220	760	760							
		1306A	7800	4	60												
		1306B	5250	4	61												
		2500A	2420	8	1												
		2500B	4930	16	1												

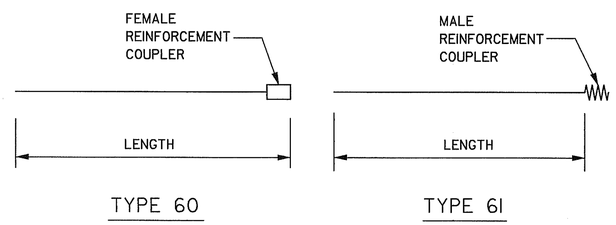

TYPE 60

TYPE 61

NOTE: REINFORCEMENT STEEL COUPLERS SHALL BE THREADED TYPE "RICHMOND SCREW ANCHOR CO., INC. DOWEL BAR SUBSTITUTION AND SPLICER SYSTEM" OR "ENRICO PRODUCTS, INC. LENTON STANDARD COUPLER" OR EQUAL AS APPROVED BY THE ENGINEER. COST OF REINFORCEMENT STEEL COUPLERS SHALL BE INCLUDED IN THE PRICE BID FOR SUPERSTRUCTURE REINFORCING STEEL.

BRIDGE NO. 8

OPTIMA Inc.
4727 N. ROYAL ATLANTA DR., SUITE G
TUCKER, GEORGIA 30084

Heath & Lineback Engineers INCORPORATED
12 POWDER SPRINGS STREET, SUITE 240
MARIETTA, GEORGIA 30064

GEORGIA
DEPARTMENT OF TRANSPORTATION
PRECONSTRUCTION DIVISION-OFFICE OF MAINTENANCE

MISCELLANEOUS DETAILS
JOINT & EDGE BEAM REPLACEMENT ON
NBL S.R. 410 OVER VALLEY BROOK ROAD

DEKALB COUNTY, GA. IM-STP-00MS(265)

SCALE: NO SCALE DECEMBER 1999

REVISIONS	DATE	BY

BRIDGE SHEET 4 OF 4

DESIGNED GW | CHECKED | REVIEWED
DRAWN CAD | DESIGN GROUP MAINTENANCE | APPROVED