STATE	PROJECT NUMBER	SHEET NO.	TOTAL SHEETS
GA.	IM-STP-00MS(265)	16	198

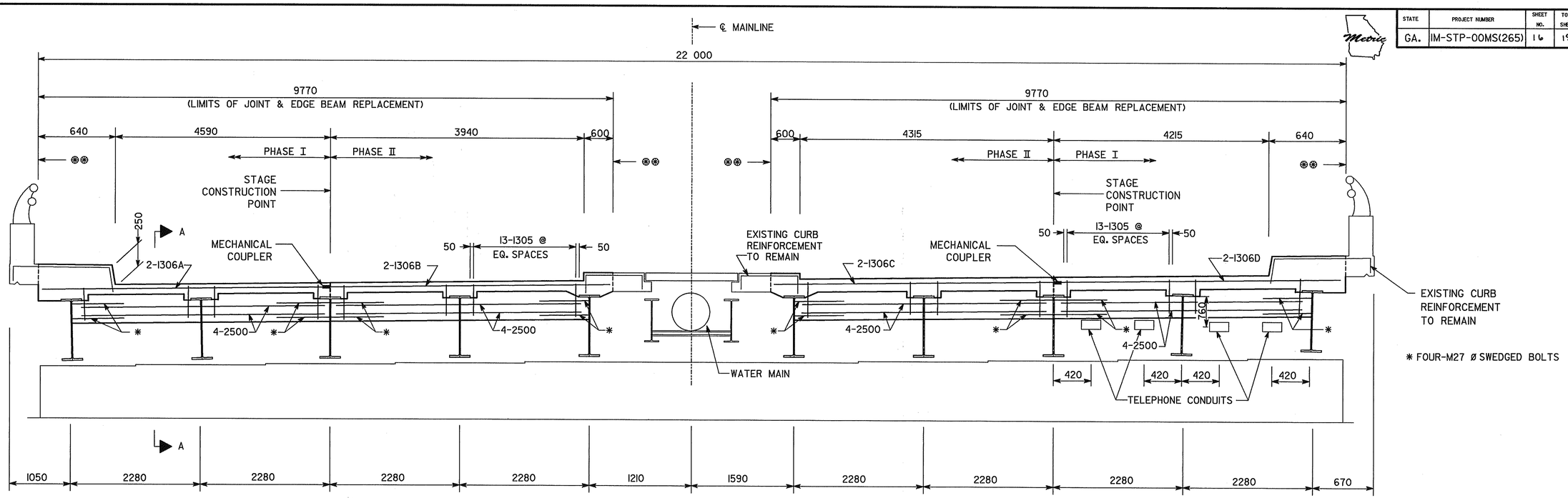

EXISTING CURB REINFORCEMENT TO REMAIN

✱ FOUR-M27 Ø SWEDGED BOLTS

FULL SECTION OF EDGE BEAM

LOOKING UPSTATION

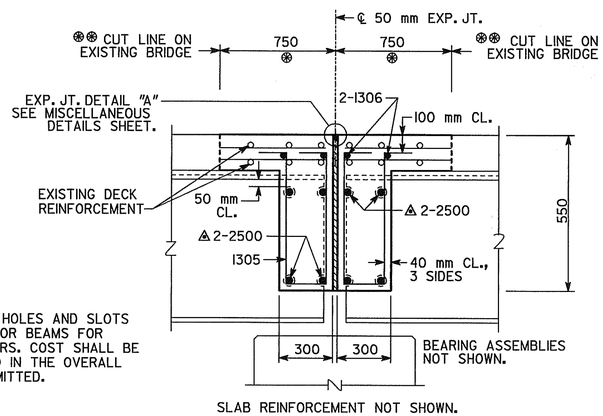

PROVIDE HOLES AND SLOTS IN INTERIOR BEAMS FOR 2500 BARS. COST SHALL BE INCLUDED IN THE OVERALL BID SUBMITTED.

SLAB REINFORCEMENT NOT SHOWN.

SECTION A-A THRU EDGE BEAM @ BENT 2

NOTES: EXISTING DECK, AND CURB REINFORCEMENT TO REMAIN. REINFORCING STEEL DAMAGED BY CONTRACTOR SHALL BE REPLACED AT NO COST TO THE DEPARTMENT.

⊛ PORTION OF DECK, BACKWALL, CURB, AND EDGE BEAM TO BE REMOVED AND REPLACED AS SHOWN.

⊛⊛ REQUIRED VERTICAL 25 mm SAW CUT. CARE SHALL BE EXERCISED SO THAT THE EXISTING REINFORCING STEEL IS NOT DAMAGED.

NOTE: COST FOR SUPPLYING AND INSTALLING SLEEVE AND BOLT TO BE INCLUDED IN PRICE BID FOR SUPERSTR REINFORCING STEEL.

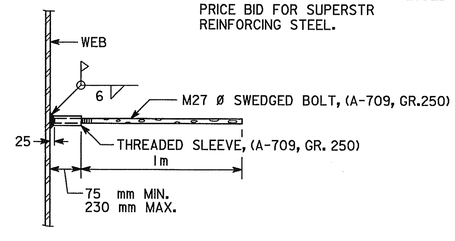

EDGE BEAM BAR LAP DETAIL

NOT TO SCALE

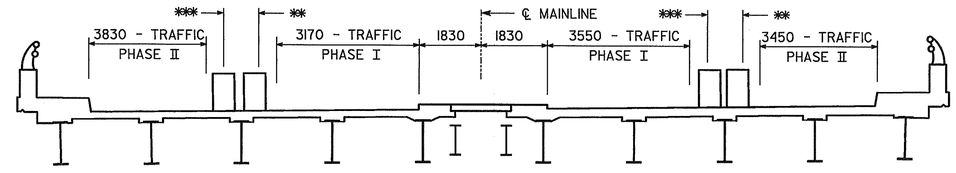

CONSTRUCTION SEQUENCE

LOOKING UPSTATION

✱✱ - PHASE I TEMP. CONSTRUCTION BARRIER LOCATION

✱✱✱ - PHASE II TEMP. CONSTRUCTION BARRIER LOCATION

1. PLACE STRIPED DRUMS AT PHASE I LOCATIONS, MAINTAINING ONE 3170 AND 3550 mm TRAVEL LANE IN EACH DIRECTION ON BRIDGE.
2. REMOVE PARTS OF EXISTING BRIDGE, BUILD PHASE I ACCORDING TO THE PLANS.
3. RELOCATE STRIPED DRUMS TO PHASE II LOCATIONS, MAINTAINING ONE 3830 AND 3450 mm TRAVEL LANE IN EACH DIRECTION ON BRIDGE.
4. REMOVE PARTS OF EXISTING BRIDGE, BUILD PHASE II ACCORDING TO THE PLANS.
5. REMOVE STRIPED DRUMS AND OPEN COMPLETED BRIDGE TO TRAFFIC.

BRIDGE NO. 2

OPTIMA Inc.
4727 N. ROYAL ATLANTA DR., SUITE G
TUCKER, GEORGIA 30084

Heath & Lineback Engineers INCORPORATED
12 POWDER SPRINGS STREET, SUITE 240
MARIETTA, GEORGIA 30064

GEORGIA
DEPARTMENT OF TRANSPORTATION
PRECONSTRUCTION DIVISION-OFFICE OF MAINTENANCE

SUPERSTRUCTURE DETAIL & CONST. SEQ.
JOINT & EDGE BEAM REPLACEMENT ON
S.R. 8 OVER S.R. 410

DEKALB COUNTY, GA. IM-STP-00MS(265)

SCALE: NO SCALE DECEMBER 1999

REVISIONS	BY	DATE

BRIDGE SHEET 3 OF 4

DESIGNED GW | CHECKED | REVIEWED
DRAWN CAD | DESIGN GROUP MAINTENANCE | APPROVED

4/14/2008 3:48:28 PM \\GDOT-DSN1\GOPLOT\QCF\Road_Design_Tiff-18x12_to_Tiff-36x24.qcf mpitts C:\Documents and Settings\mpitts\Desktop\713920-\Construction\713920_0018.tif GO-RD-Plans-Review