STATE	PROJECT NUMBER	SHEET NO.	TOTAL SHEETS
GA.	IM-STP-00MS(265)	13	198

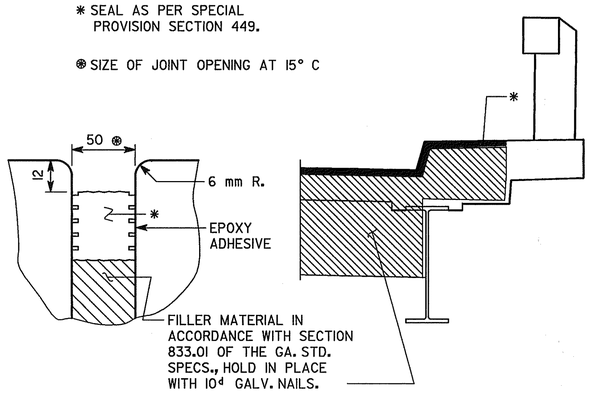

LONGITUDINAL SECTION TRANSVERSE SECTION

EXPANSION JOINT DETAIL "A" AT BENT 3

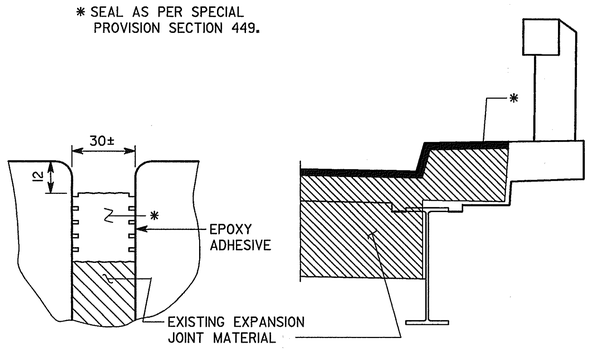

LONGITUDINAL SECTION TRANSVERSE SECTION

RESEAL EXPANSION JOINT DETAIL AT BENTS 2 & 4

LOCATION	NO. OF LOC.	MARK	LENGTH mm	NO. BARS REQ'D.	TYPE	A	G	B mm	C mm	D mm	E mm	F mm	H mm	J mm	K mm	N	θ
BENT 3	1																
		1305	1120	96	31	4	4	220	335	335							
		2500A	4060	4	60												
		2500B	4060	4	61												
		2506A	4730	4	60												
		2506B	4730	4	61												

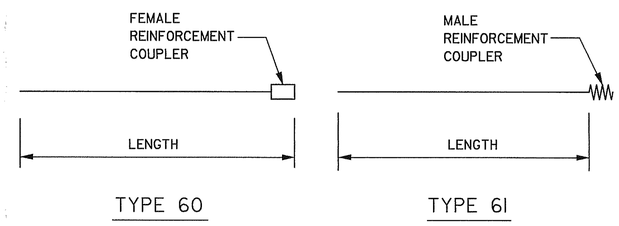

TYPE 60 TYPE 61

NOTE: REINFORCEMENT STEEL COUPLERS SHALL BE THREADED TYPE "RICHMOND SCREW ANCHOR CO., INC. DOWEL BAR SUBSTITUTION AND SPLICER SYSTEM" OR "ENRICO PRODUCTS, INC. LENTON STANDARD COUPLER" OR EQUAL AS APPROVED BY THE ENGINEER. COST OF REINFORCEMENT STEEL COUPLERS SHALL BE INCLUDED IN THE PRICE BID FOR SUPERSTRUCTURE REINFORCING STEEL.

BRIDGE NO. 1

OPTIMA Inc.
4727 N. ROYAL ATLANTA DR., SUITE G
TUCKER, GEORGIA 30084

Heath & Lineback Engineers INCORPORATED
12 POWDER SPRINGS STREET, SUITE 240
MARIETTA, GEORGIA 30064

GEORGIA
DEPARTMENT OF TRANSPORTATION
PRECONSTRUCTION DIVISION-OFFICE OF MAINTENANCE

MISCELLANEOUS DETAILS
JOINT & EDGE BEAM REPLACEMENT ON
FIELDER ROAD (C.R. 1341) OVER I-75

CLAYTON COUNTY, GA. IM-STP-00MS(265)

SCALE: NO SCALE DECEMBER 1999

DESIGNED GW CHECKED REVIEWED
DRAWN CAD DESIGN GROUP MAINTENANCE APPROVED

REVISIONS DATE BY

BRIDGE SHEET 4 OF 4

4/14/2008 3:48:36 PM \\GDOT-DSN1\GOPLOT\QCF\Road_Design_Tiff-18x12_to_Tiff-36x24.qcf mpltts C:\Documents and Settings\mpltts\Desktop\713920-\Construction\713920_0015.tif GO-RD-Plans-Review