STATE	PROJECT NUMBER	SHEET NO.	TOTAL SHEETS
GA.	CM-285-I(378)	71	110

(1) BARRIER DELINEATIONS, OFFSETS, & FLARE RATES

NOTE:
STRIPED DRUMS WILL BE PROVIDED IN ADVANCE OF TEMPORARY CONCRETE BARRIER INSTALLATION AND WILL BE IN PLACE BEFORE THE BARRIER IS INSTALLED AND REMOVED AFTER THE BARRIER IS REMOVED.

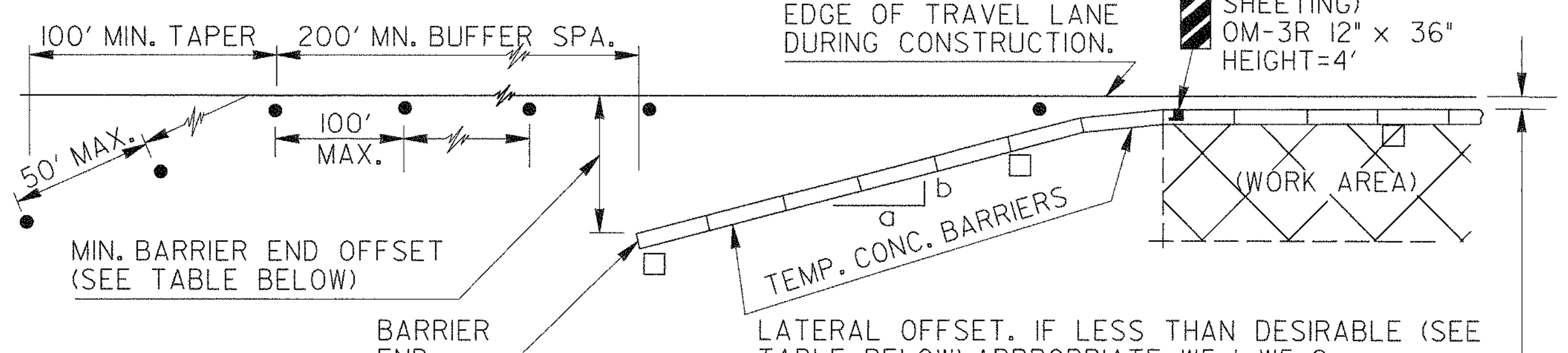

LEGEND

◎ - STRIPED DRUM

□ - 10"x10" YELLOW PANELS WITH TYPE V SHEETING- MIN. 50' SPACING

POSTED SPEED PRIOR TO WORK AREA	DESIRED MIN. LATERAL OFFSET (FT.)	FLARE RATE a/b(MIN.)	⊛MINIMUM OFFSET TO BARRIER END (FEET) A.D.T. (DURING CONSTRUCTION) UNDER 750	750-1500	1500-6000	OVER 6000
30 MPH	3.5	7:1	7	10	12	14
40 MPH	5.0	9:1	10	10	14	16
50 MPH	6.5	11:1	12	14	16	18
60 MPH	8.0	13:1	16	19	22	26
70 MPH	10.0	15:1	18	24	28	30

NOTE: INTERMEDIATE SPEEDS MAY UTILIZE AVERAGE VALUES.

⊛WHERE CONDITIONS DO NOT ALLOW THE ABOVE BARRIER END OFFSETS, A TEMPORARY GUARDRAIL ANCHORAGE AT THE BARRIER END IS REQUIRED. IF INSTALLATION OF GUARDRAIL ANCHORAGE IS NOT PRACTICAL DUE TO LOCAL CONDITIONS, A TEMPORARY TRAFFIC IMPACT ATTENUATOR SAND LOADED MODULES, SHALL BE USED AT THE BARRIER END. IF NEITHER ANCHORAGE NOR SAND MODULE ATTENUATOR CAN BE PROVIDED, AN APPROVED PORTABLE ATTENUATOR IS REQUIRED. (SEE DETAIL BELOW.)

(2) MINIMUM BARRIER ADVANCEMENT LENGTH (WITH TEMPORARY GUARDRAIL ANCHOR OR ATTENUATOR.)

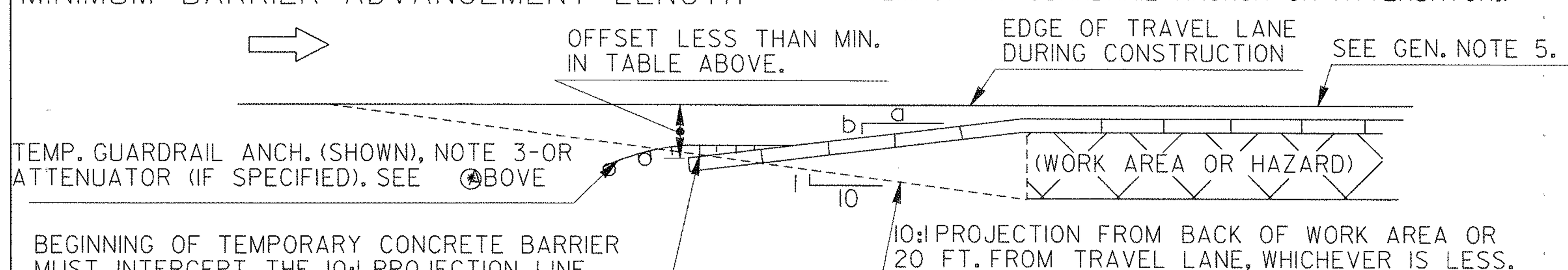

NOTE: TRAFFIC CONTROL DEVICES & OTHER DETAILS NOT SHOWN HERE WILL BE THE SAME AS SHOWN ABOVE.

TEMPORARY BARRIER TRANSITION - CAST - IN - PLACE

(REQUIRED WHERE TEMPORARY BARRIER BUTTS AGAINST PERMANENT BARRIER)

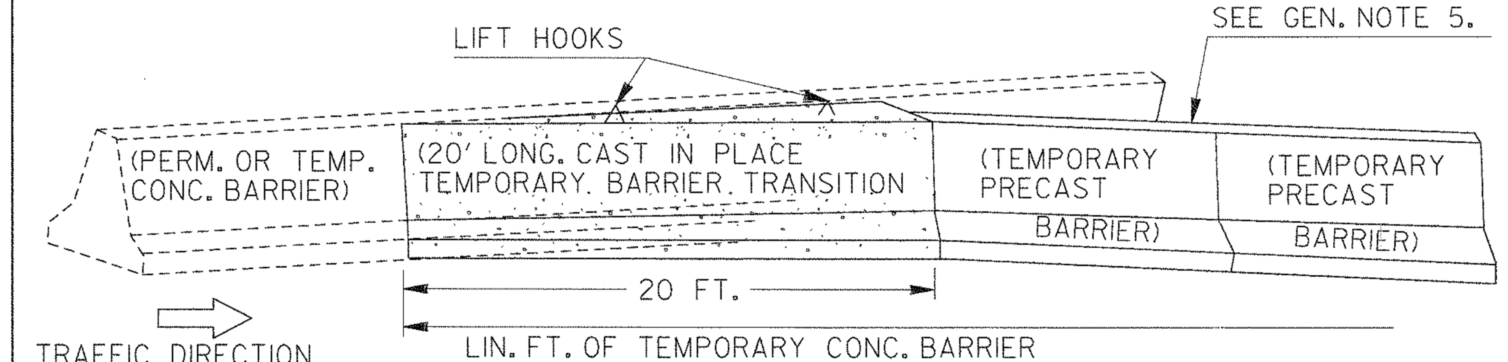

NOTES:

1. COVER PERMANENT BARRIER, PAVEMENT, & PRECAST SECTIONS WITH POLYETHYLENE AS A BOND BREAKER.
2. PLACE BARRIER SIDE FORMS AGAINST PERMANENT & TEMP. BARRIER TO FORM SMOOTH TRANSITION.
3. USE CLASS "A" CONCRETE, FORMS MAY BE REMOVED AFTER ONLY 2 HOURS, A TYPE I FINISH IS SUFFICIENT.
4. TRANSITION SHALL BE COMPLETED BEFORE TEMPORARY BARRIER IS EXPOSED TO ON-COMING TRAFFIC.
5. TRANSITION IS NOT REQ'D. AT TRAILING END OF ONEWAY TRAFFIC FLOW.
6. TRANSITION WILL BE PAID FOR AS PRECAST CONCRETE BARRIER, METHOD 1 OR 2. PAYMENT INCLUDES REUSE, REMOVAL, AND DISPOSAL. TRANSITIONS FOR METHOD 2 WILL BE PROVIDED BY THE CONTRACTOR WITH PAYMENT MADE AT THE CONTRACT PRICE FOR METHOD 2.

(3) TEMPORARY TRAFFIC IMPACT ATTENUATOR (40 MPH) (SAND LOADED MODULES)

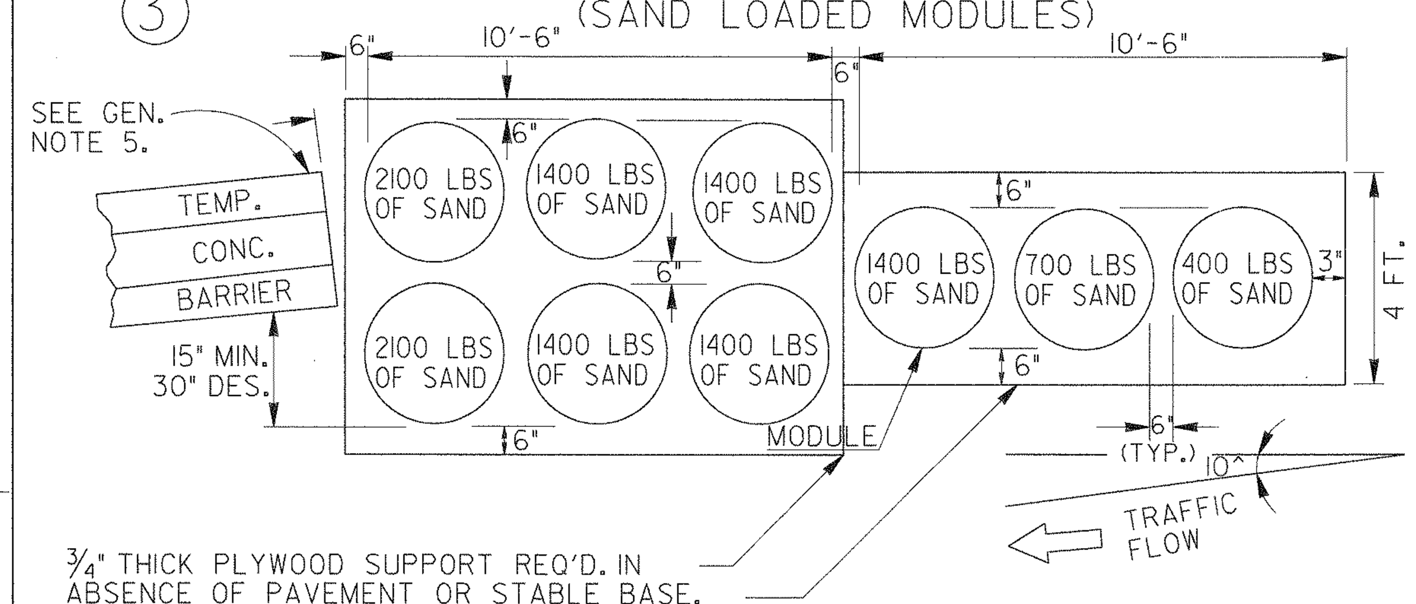

¾" THICK PLYWOOD SUPPORT REQ'D. IN ABSENCE OF PAVEMENT OR STABLE BASE.

NOTES:
1. ATTENUATOR SHALL BE ANGLED AT 10 DEGREES TO EDGE OF TRAVEL LANE.
2. DO NOT USE ARRAY AS SHOWN ABOVE IN GORE AREA.
3. USE OF TEMPORARY ATTENUATOR OR TEMP. GUARDRAIL ANCHORAGE IS WHERE BARRIER END IS WITHIN THE MINIMUM OFFSET AS SPECIFIED AT LEFT.
4. FOR POSTED SPEEDS GREATER THAN 40 MPH, SEE STD. 4962.

PORTABLE ATTENUATOR TERMINAL

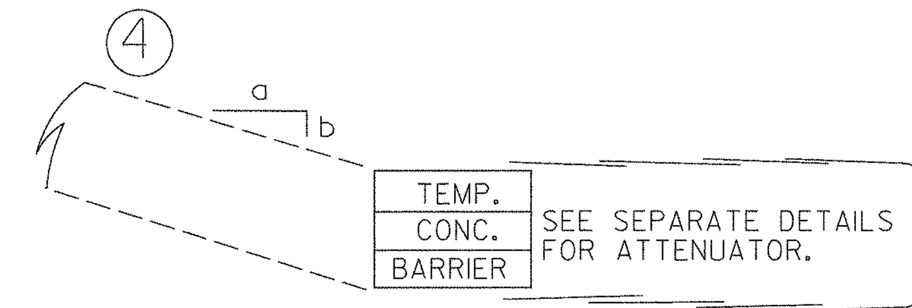

SEE GEN. NOTE 5 FOR DELINEATION REQUIREMENT.

NOTE: WHERE GUARDRAIL IMPACT ATTENUATOR IS SPECIFIED SEE SECTION 650 FOR SPECIFICATIONS AND CONSTRUCTION DETAIL FOR APPLICABLE DETAILS.

BARRIER TERMINAL END TREATMENT OPTIONS

(1) = FIRST OPTION, MINIMUM OFFSET IS OBTAINED.

(2) = SECOND OPTION, TEMPORARY GUARDRAIL ANCHORAGE, AS SPECIFIED.

(3) = THIRD OPTION, TEMPORARY (SAND MODULES) ATTENUATOR.

(4) = FOURTH OPTION, PORTABLE ATTENUATOR.

NOTE: AT APPLICABLE LOCATIONS, BARRIER END MAY BE TERMINATED WITH A CAST-IN-PLACE TRANSITION (TOP MIDDLE) OR CONNECTED TO GUARDRAIL (BOT. MIDDLE) INSTEAD OF THE ABOVE OPTIONS.

TEMPORARY CONCRETE BARRIER/GUARDRAIL CONNECTIONS & JUNCTIONS

NOTE:
PAYMENT FOR TEMPORARY CONCRETE BARRIER WILL INCLUDE ALL SPECIAL END SHOES, BOLTS, BOLT HOLES, NUTS, WASHERS, ADDITIONAL GUARDRAIL POSTS, ETC., NECESSARY FOR THE CONNECTIONS, AS SHOWN, WHEN REQUIRED.

ALL SPECIAL END SHOES WILL BE CONNECTED TO CONCRETE BARRIER WITH FOUR ⅞" DIA. BOLTS (A.S.T.M. A-307). LOCATION OF THE BOLTS. MAY BE VARIED AT THE DIRECTION OF THE ENGINEER. REMOVABLE TYPE ⅞" DIA. CONCRETE ANCHOR BOLTS, INSTALLED ACCORDING TO MANUFACTURER'S RECOMMENDATIONS, MAY BE USED INSTEAD OF THE BOLTS CONNECTION SYSTEM SHOWN. ANY BOLTS BROKEN OR IMPROPERLY INSTALLED WILL BE CAUSE FOR REJECTION.

▼ INDICATED CONNECTIONS MAY BE VARIED PROVIDED THAT THE ⅞" DIA. BOLTS MISS THE BARRIER REINFORCING.

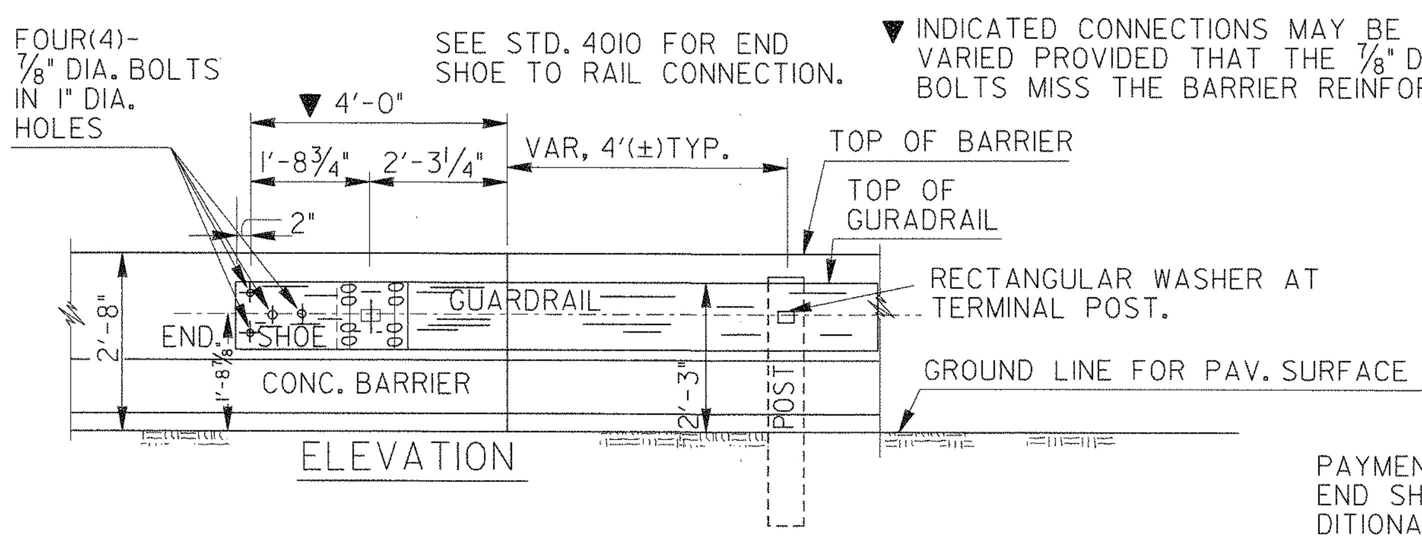

ELEVATION

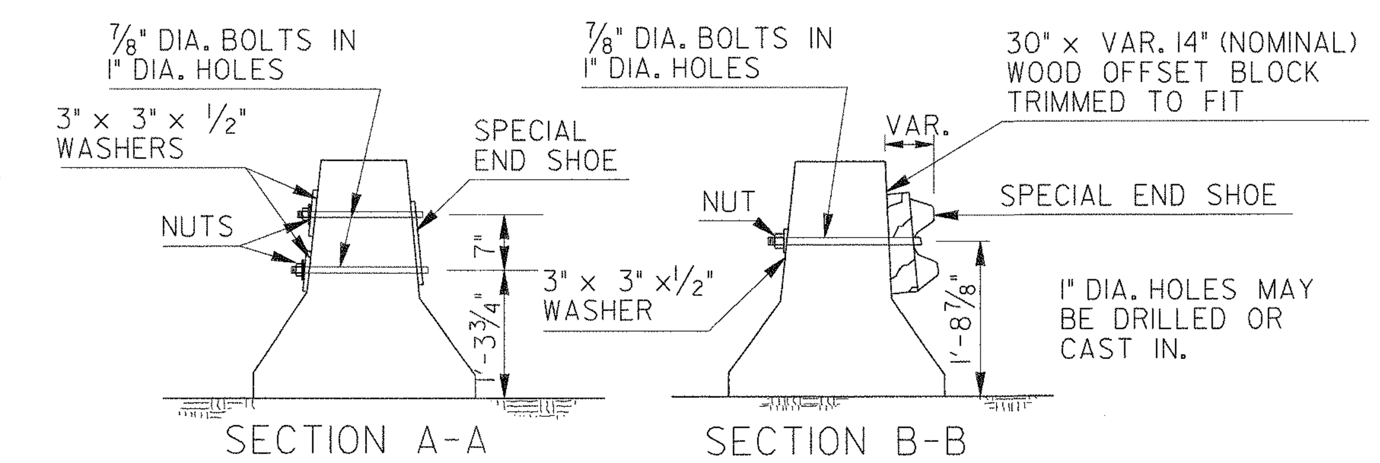

— SPECIAL NOTE: —
PAYMENT FOR TEMP. GUARDRAIL ANCHORAGE INCLUDES END SHOE, CONNECTING BOLTS, NUTS & WASHERS, ADDITIONAL POSTS & OFFSET BLOCKS, 25 FT. ADDITIONAL "W"-BEAM WITH THE DBL. NESTED SECTION PLUS STANDARD ANCHORAGE COMPONENTS. (TOTAL LENGTH=67'(+).

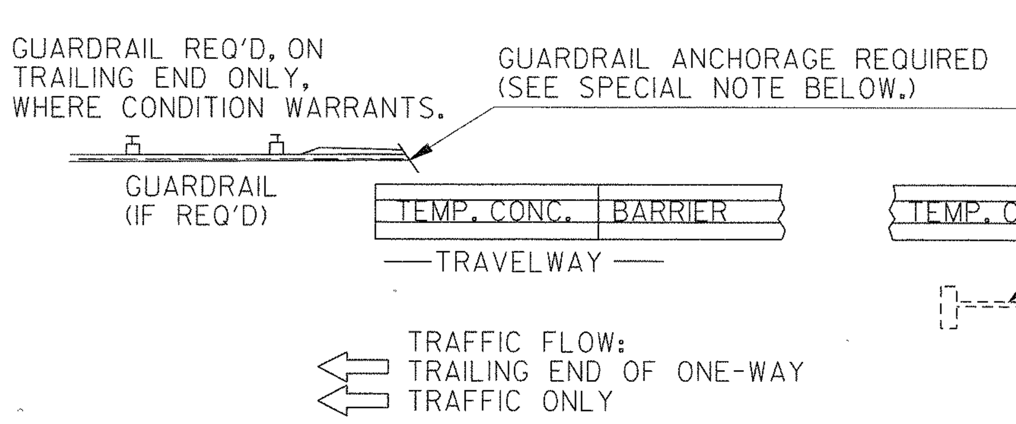

PLAN

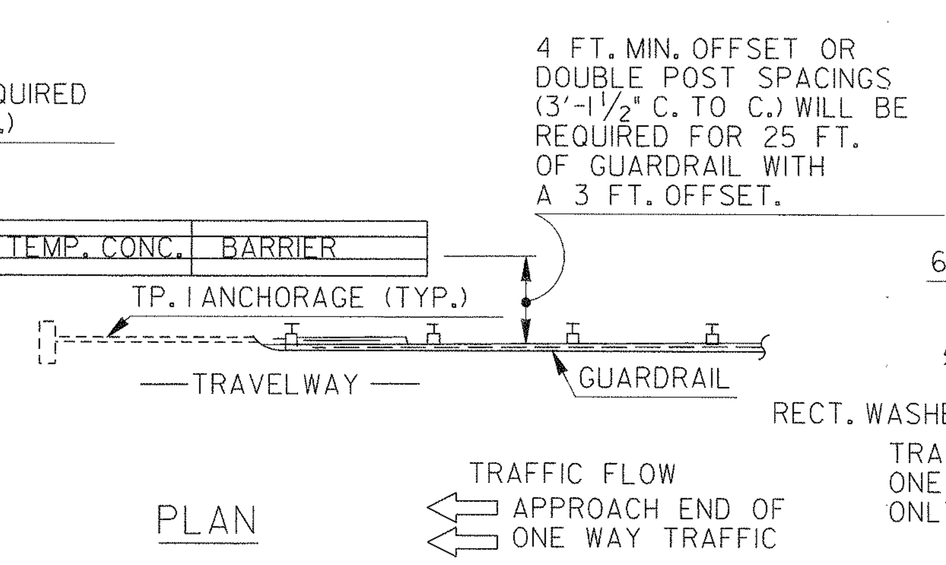

PLAN

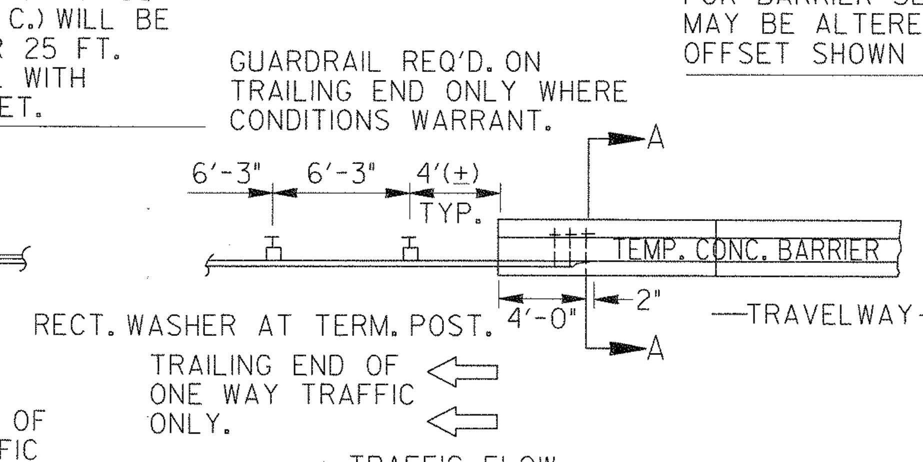

PLAN

FOR BARRIER SECTIONS BEHIND GUARDRAIL, THE FLARE a/b MAY BE ALTERED, AS NEEDED, TO PROVIDE THE 4' OR 5' OFFSET SHOWN HERE

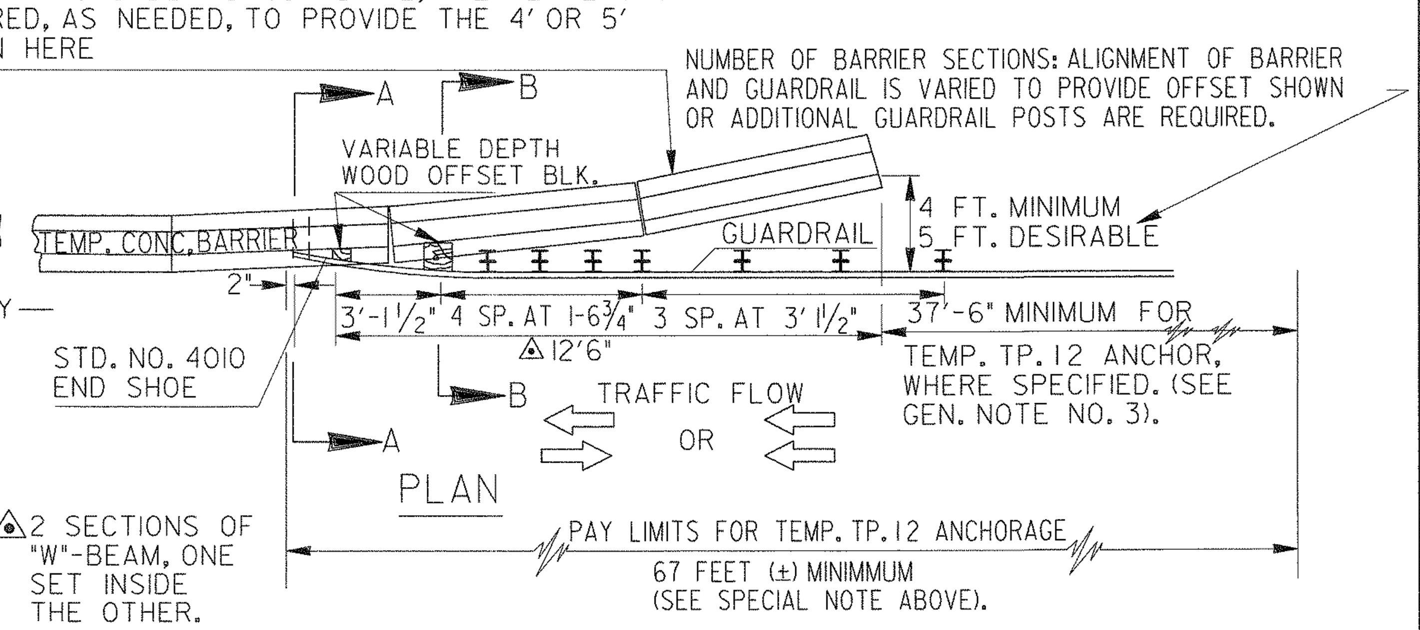

PLAN

⚠2 SECTIONS OF "W"-BEAM, ONE SET INSIDE THE OTHER.

SPECIAL NOTE:
UNACCEPTABLE OR NON-STANDARD END TREATMENT WILL NOT BE LEFT IN PLACE AFTER REMOVAL OF THE TEMPORARY CONC. BARRIER, ALL GUARDRAIL AND ALL ANCHORAGES LEFT IN PLACE WILL BE TREATED AS NECESSARY TO CONFORM WITH CURRENT STANDARDS IMMEDIATELY AFTER OR BEFORE REMOVAL OF THE TEMPORARY CONCRETE BARRIER.

GENERAL NOTES:

1. BARRIERS SHALL BE PLACED SUCH THAT OPENINGS BETWEEN INDIVIDUAL SECTIONS SHALL BE KEPT TO A MINIMUM.
2. THE BARRIER IS NOT TO BE CONNECTED TO THE BRIDGE DECK BY CONNECTING PINS OR REBARS.
3. WHERE TEMPORARY GUARDRAIL ANCHORAGE IS SPECIFIED, THE FIRST BREAKAWAY POST SHALL BE 37'-6" MINIMUM IN ADVANCE OF BEGINNING THE TEMPORARY CONCRETE BARRIER INSTALLATION.
4. PRECAST BARRIER SECTIONS SHALL BE OF REQUIRED CONSTRUCTION ACCORDING TO STD. 4961.
5. STRIPED DRUMS, OBJECT MARKERS, ETC. SHOWN FOR OPTION 1 SHALL BE APPLICABLE FOR THE OTHER OPTIONS AS WELL. TRAFFIC CONTROL NOT SHOWN ON THIS STANDARD SHALL BE IN ACCORDANCE WITH CURRENT EDITION OF SECTION 150 AND SEPARATE STANDARDS, CONSTRUCTION DETAILS AND/OR PLAN SHEETS.
6. ALL JOINTS BETWEEN PRECAST BARRIER SECTIONS WILL BE CONNECTED WITH EITHER A HOOKED REBAR OR PIN ASSEMBLY. (SEE STD. 4961).

DATE	REVISION	BY
2-1-01	O.M. SH. SPEC.	RMU

DEPARTMENT OF TRANSPORTATION
STATE OF GEORGIA

STANDARD

CONCRETE BARRIER - TEMPORARY
(END TREATMENT OPTIONS)

NO SCALE — REV. & REDR. MAY, 1999

DES. ____ TRA. ____ CHK. ____

(SUBMITTED) James A. Kennedy — STATE ROAD & AIRPORT DESIGN ENGR.

(APPROVED) [signature] — CHIEF ENGINEER

NUMBER 4960