STATE	PROJECT NUMBER	SHEET NO.	TOTAL SHEETS
GA.	CM-285-1(378)	46	110

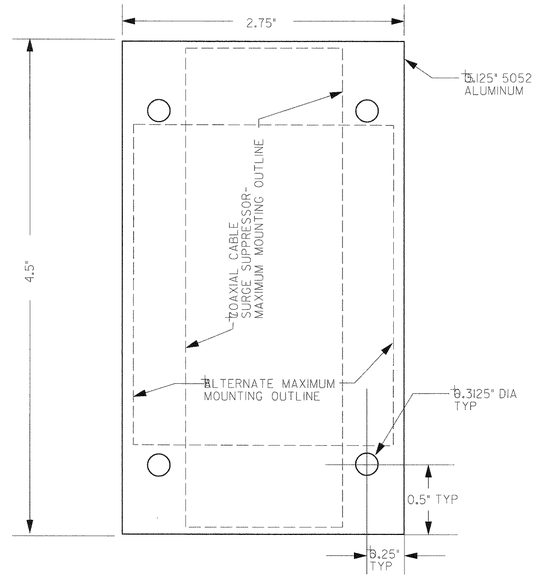

ALL DIMENSIONS ± 0.05" TOLERANCE

COAXIAL CABLE SURGE SUPPRESSOR MOUNTING PLATE

NTS

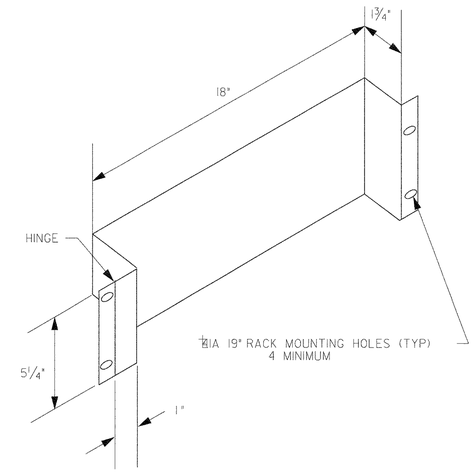

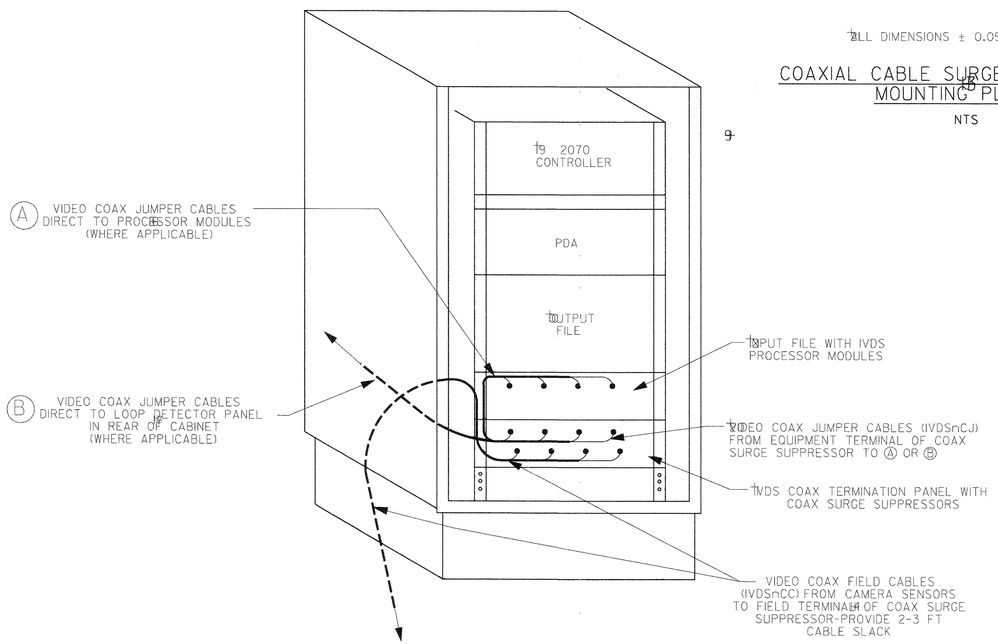

332, 334 OR 336S CABINET-FRONT VIEW

NTS

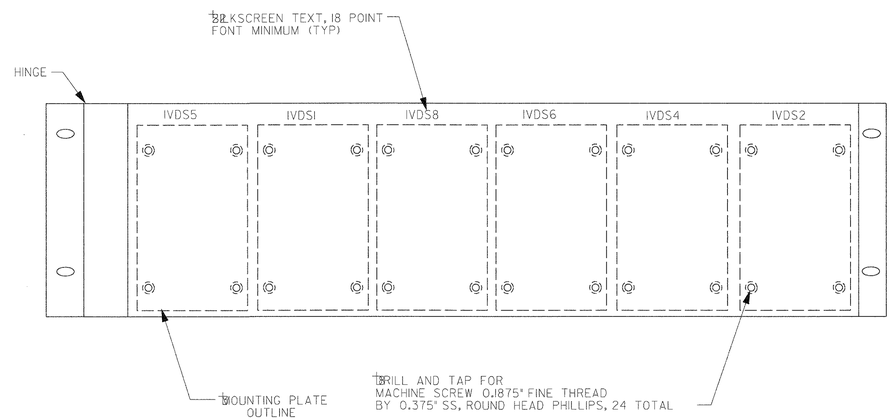

NOTE: FURNISH 6 MOUNTING PLATES AND 24 MOUNTING PLATE SCREWS WITH EACH PANEL

COAXIAL TERMINATION PANEL-332, 334 OR 336S CABINET

NTS

GRESHAM SMITH AND PARTNERS

TRANSCORE®

OFFICE OF TRAFFIC SAFETY & DESIGN

DATE	REVISIONS

GEORGIA DEPARTMENT OF TRANSPORTATION

IVDS DETAILS

COAX TERMINATION PANEL

PROJECT - PI 713372

COUNTY - FULTON & CLAYTON

DATE - __/__/__ SHEET 40-12

$FILE$
$DATE$