STATE	PROJECT NUMBER	SHEET NO.	TOTAL SHEETS
GA.	CM-285-1(378)	44	110

SITE LAYOUT

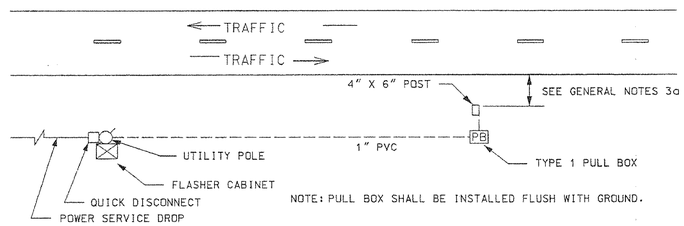

POST MOUNTING DETAIL

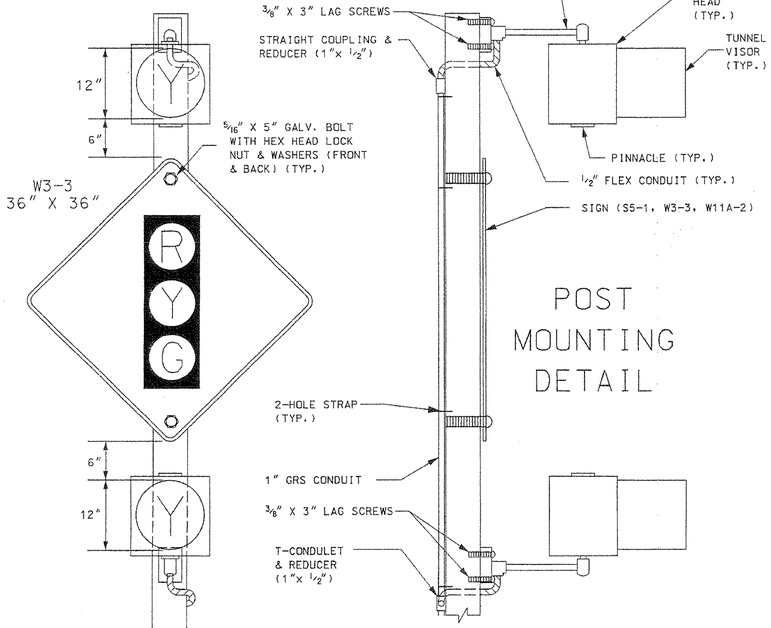

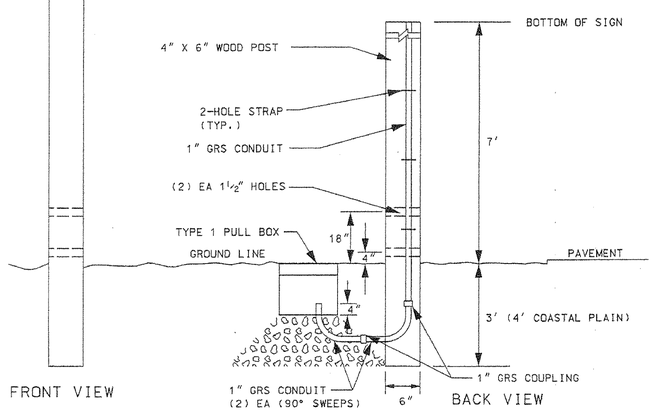

SITE LAYOUT

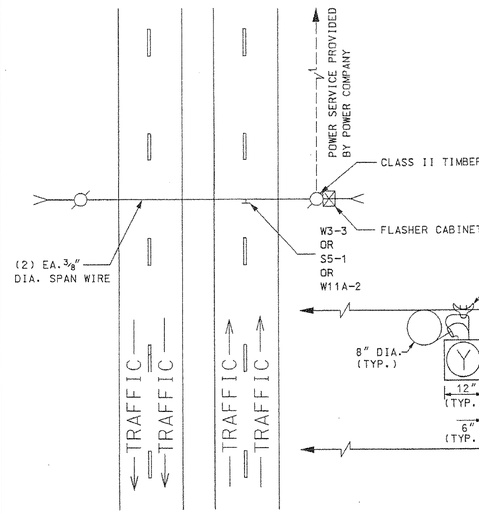

SPAN MOUNTING DETAIL

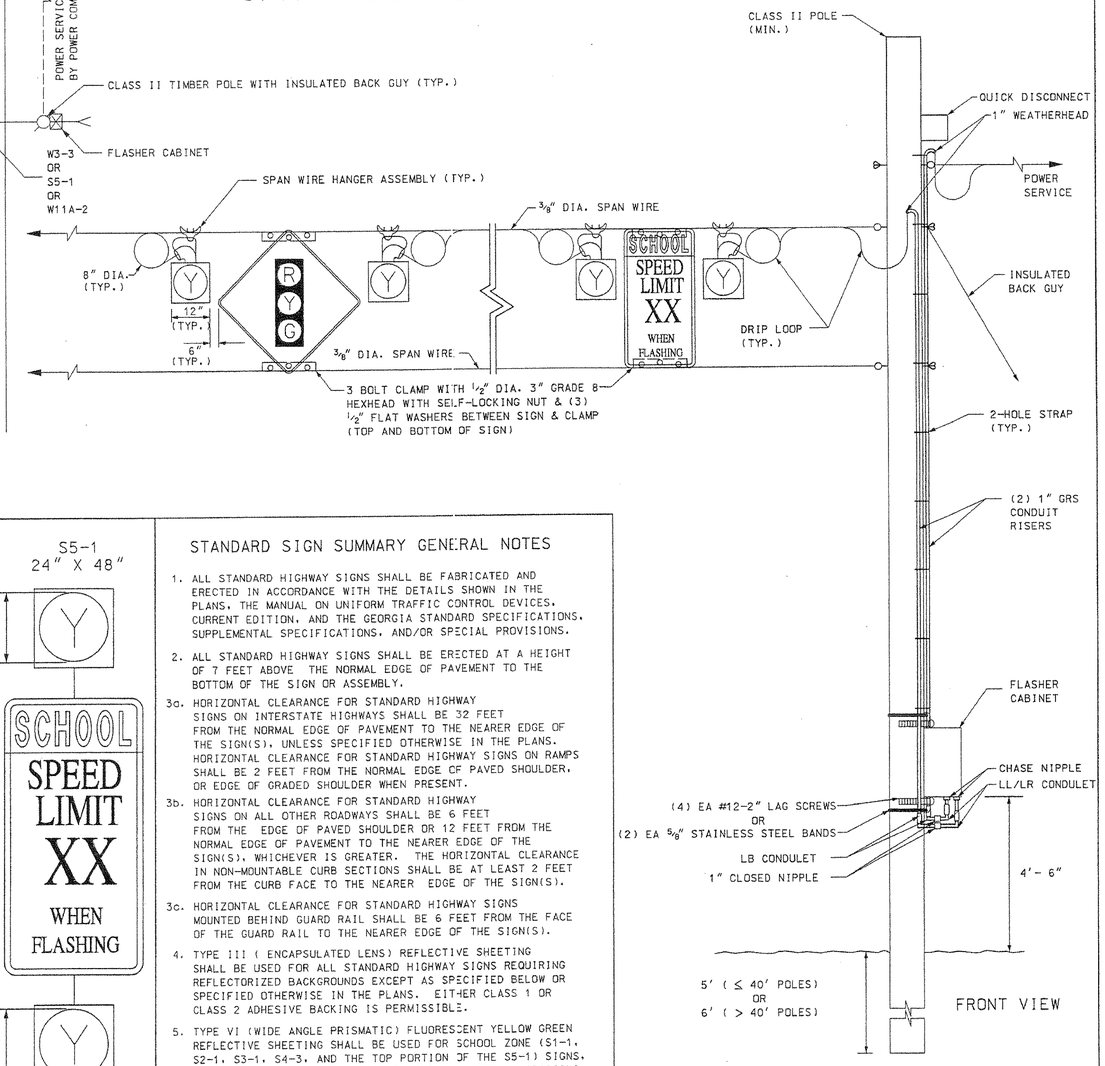

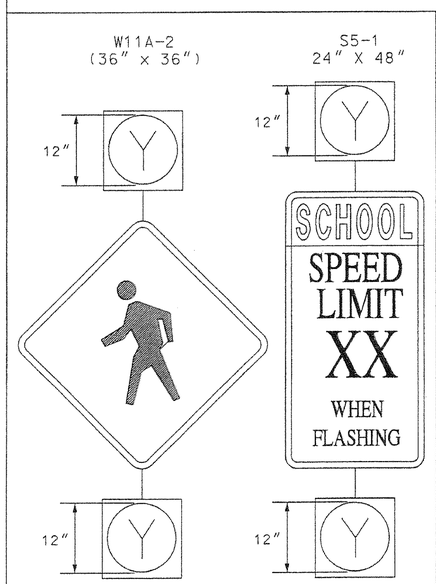

NOTE: POST MOUNTING AND SPAN MOUNTING DETAILS APPLY TO ALL SIGN ASSEMBLIES SHOWN ON THIS SHEET.

STANDARD SIGN SUMMARY GENERAL NOTES

1. ALL STANDARD HIGHWAY SIGNS SHALL BE FABRICATED AND ERECTED IN ACCORDANCE WITH THE DETAILS SHOWN IN THE PLANS, THE MANUAL ON UNIFORM TRAFFIC CONTROL DEVICES, CURRENT EDITION, AND THE GEORGIA STANDARD SPECIFICATIONS, SUPPLEMENTAL SPECIFICATIONS, AND/OR SPECIAL PROVISIONS.
2. ALL STANDARD HIGHWAY SIGNS SHALL BE ERECTED AT A HEIGHT OF 7 FEET ABOVE THE NORMAL EDGE OF PAVEMENT TO THE BOTTOM OF THE SIGN OR ASSEMBLY.

3a. HORIZONTAL CLEARANCE FOR STANDARD HIGHWAY SIGNS ON INTERSTATE HIGHWAYS SHALL BE 32 FEET FROM THE NORMAL EDGE OF PAVEMENT TO THE NEARER EDGE OF THE SIGN(S), UNLESS SPECIFIED OTHERWISE IN THE PLANS. HORIZONTAL CLEARANCE FOR STANDARD HIGHWAY SIGNS ON RAMPS SHALL BE 2 FEET FROM THE NORMAL EDGE OF PAVED SHOULDER, OR EDGE OF GRADED SHOULDER WHEN PRESENT.

3b. HORIZONTAL CLEARANCE FOR STANDARD HIGHWAY SIGNS ON ALL OTHER ROADWAYS SHALL BE 6 FEET FROM THE EDGE OF PAVED SHOULDER OR 12 FEET FROM THE NORMAL EDGE OF PAVEMENT TO THE NEARER EDGE OF THE SIGN(S), WHICHEVER IS GREATER. THE HORIZONTAL CLEARANCE IN NON-MOUNTABLE CURB SECTIONS SHALL BE AT LEAST 2 FEET FROM THE CURB FACE TO THE NEARER EDGE OF THE SIGN(S).

3c. HORIZONTAL CLEARANCE FOR STANDARD HIGHWAY SIGNS MOUNTED BEHIND GUARD RAIL SHALL BE 6 FEET FROM THE FACE OF THE GUARD RAIL TO THE NEARER EDGE OF THE SIGN(S).

4. TYPE III (ENCAPSULATED LENS) REFLECTIVE SHEETING SHALL BE USED FOR ALL STANDARD HIGHWAY SIGNS REQUIRING REFLECTORIZED BACKGROUNDS EXCEPT AS SPECIFIED BELOW OR SPECIFIED OTHERWISE IN THE PLANS. EITHER CLASS 1 OR CLASS 2 ADHESIVE BACKING IS PERMISSIBLE.
5. TYPE VI (WIDE ANGLE PRISMATIC) FLUORESCENT YELLOW GREEN REFLECTIVE SHEETING SHALL BE USED FOR SCHOOL ZONE (S1-1, S2-1, S3-1, S4-3, AND THE TOP PORTION OF THE S5-1) SIGNS, BICYCLE CROSSING (W11-1) SIGNS, AND PEDESTRIAN CROSSING (W11-2 AND W11A-2) SIGNS. SIGNS WITHIN THE SAME ASSEMBLY AS THE SCHOOL ZONE SIGNS SPECIFICALLY LISTED ABOVE AND ALL REGULATORY SIGNS PLACED AS PART OF THE SCHOOL ZONE SIGNING SHALL HAVE TYPE VI (WIDE ANGLE PRISMATIC) REFLECTIVE SHEETING BACKGROUNDS OF THE APPOPRIATE COLOR.
6. VERTICAL CLEARANCE FROM LOWEST POINT OF SPAN TO ROADWAY SHALL BE 17-19 FEET.
7. REFER TO GDOT TRAFFIC SIGNAL STANDARD DETAILS AND GDOT STANDARD SPECIFICATIONS 647 AND 925.

DATE	REVISIONS

GEORGIA DEPARTMENT OF TRANSPORTATION
OFFICE OF TRAFFIC OPERATIONS

WARNING FLASHER INSTALLATION DETAIL

NO SCALE — JUNE 2000

PCBDTB

TS 12 - flasher details.dgn JUL 03, 2003 16:10:24