STATE	PROJECT NUMBER	SHEET NO.	TOTAL SHEETS
GA.	CM-285-1(378)	42	110

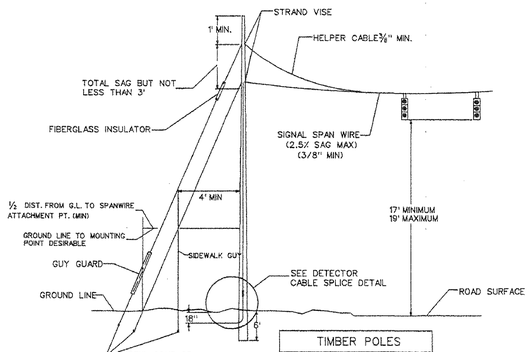

TIMBER POLES	
CLASS	CIRCUMFERENCE 6' FROM BUTT
I	41.0"
II	38.5"

TYP. TIMBER SIGNAL POLE DETAIL

SAG = .025 SPAN LENGTH
SPAN LENGTH = LONGEST DISTANCE BETWEEN ANY TWO SUPPORT POLES IN INSTALLATION.

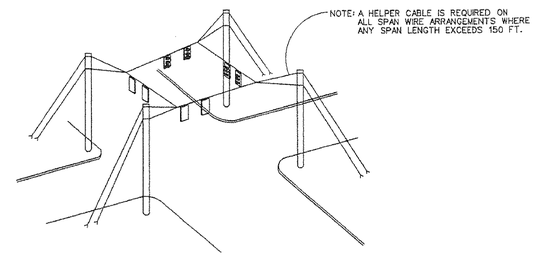

TYPICAL DETAIL "D"
SUSPENSION STRAND - PULL TOWARD POLE - LESS THAN 5 FEET

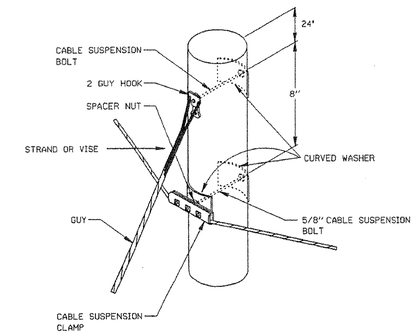

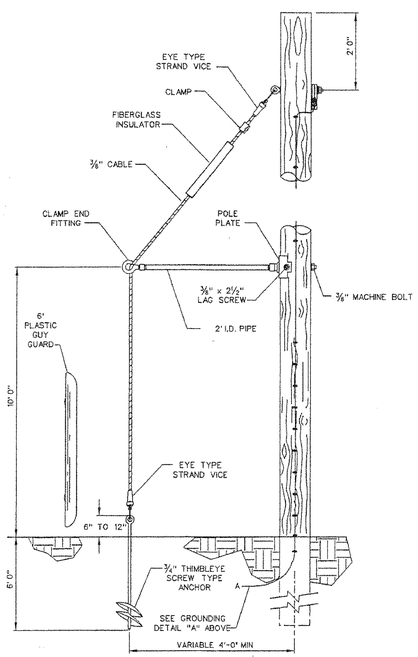

TYPICAL SIDEWALK GUY APPLICATION

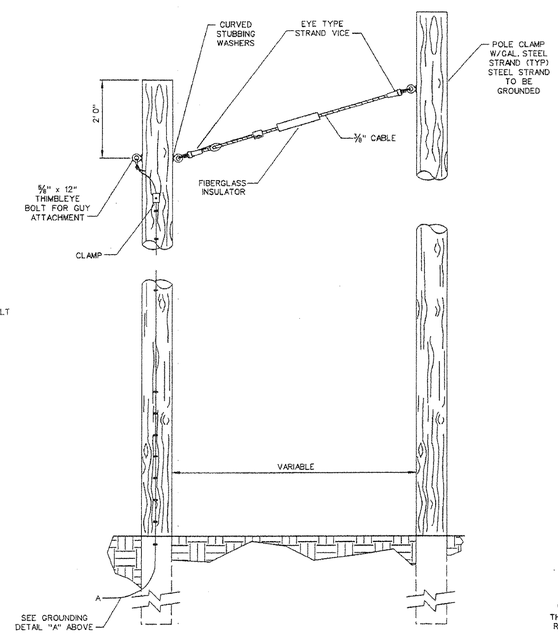

TYPICAL AERIAL GUY APPLICATION

GROUNDING DETAIL "A"
(REQUIRED AT EACH POLE LOCATION)

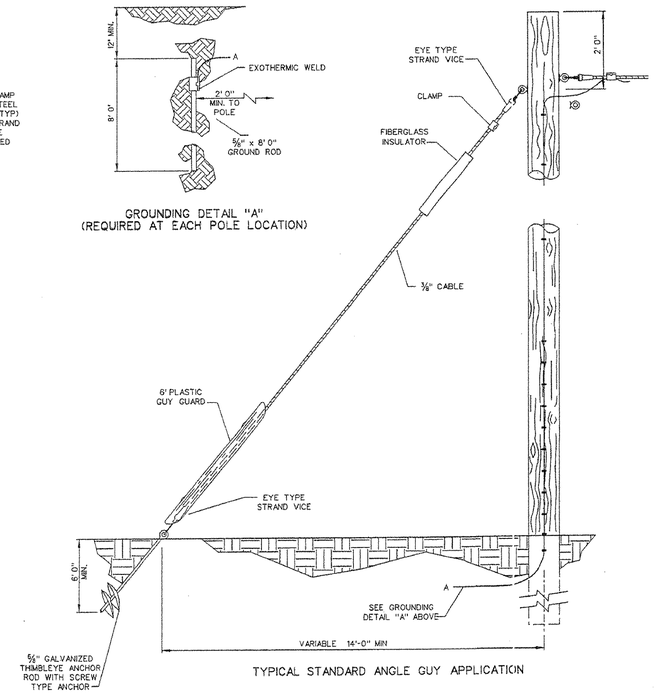

TYPICAL STANDARD ANGLE GUY APPLICATION

TYPICAL DETAIL "E"
SUSPENSION STRAND - PULL AWAY FROM POLE - 5 FEET OR MORE

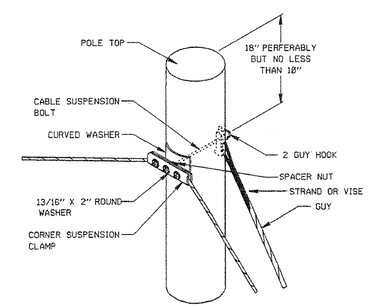

DATE	REVISIONS

GEORGIA DEPARTMENT OF TRANSPORTATION
OFFICE OF TRAFFIC SAFETY & DESIGN

STANDARD GUYING DETAILS

NO SCALE — DECEMBER 1998

PCBDT8

TS-09 - guying details.dgn Jul 03, 2003 16:10:23