STATE	PROJECT NUMBER	SHEET NO.	TOTAL SHEETS
GA.	CM-285-1(377)	89	258

PULLBOX DIMENSIONS

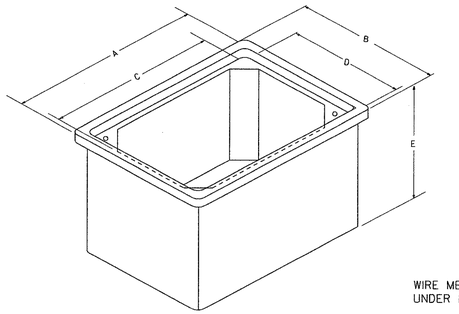

PULL BOX TYPE	* SIZE (IN.)				
	A	B	C	D	E
1	14	14	12	12	12
2	21	14	18	11	12
3	33	20	30	17	12
4S	38	26	36	24	18
4	38	26	36	24	36
5S	50	32	48	30	18
5	50	32	48	30	36
6	38	26	36	24	36
7	50	32	48	30	36

* SIZES SHOWN ARE MINIMUM TRADE SIZES. DIMENSIONS C AND D ARE MINIMUM REQUIREMENTS WITH A TOLERANCE OF NO MORE THAN - 0.50 IN/+2.0 IN.

TYPE 4, 5, 4S, 5S, 6, AND 7 PULLBOX ASSEMBLIES

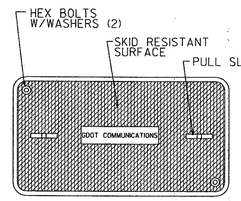

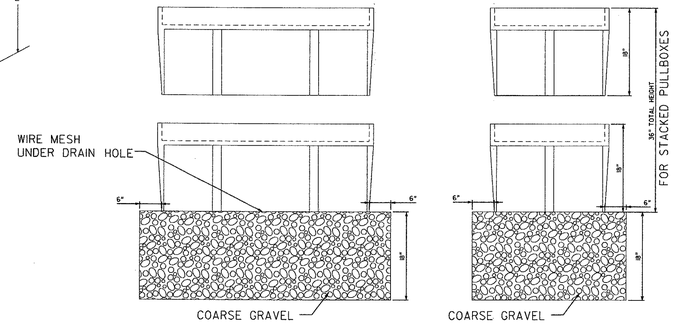

TYPE 4 AND 5

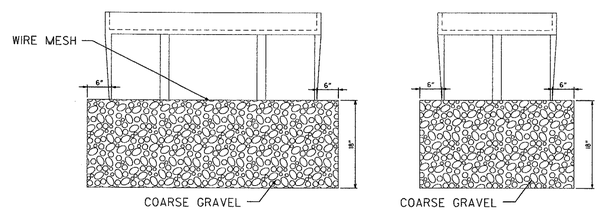

TYPE 4S AND 5S

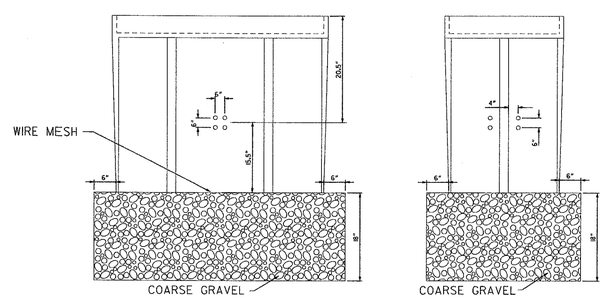

TYPE 6 AND 7

TYPICAL CONDUIT ENTRANCE DETAILS
TYPE 1,2,3,4S & 5S

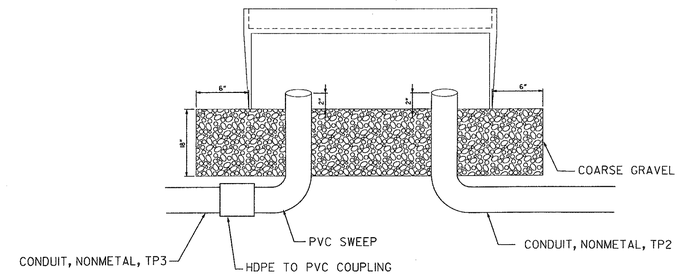

FIBER OPTIC CABLE MANAGEMENT IN TYPE 4,5,6 & 7 PULL BOX

N.T.S.

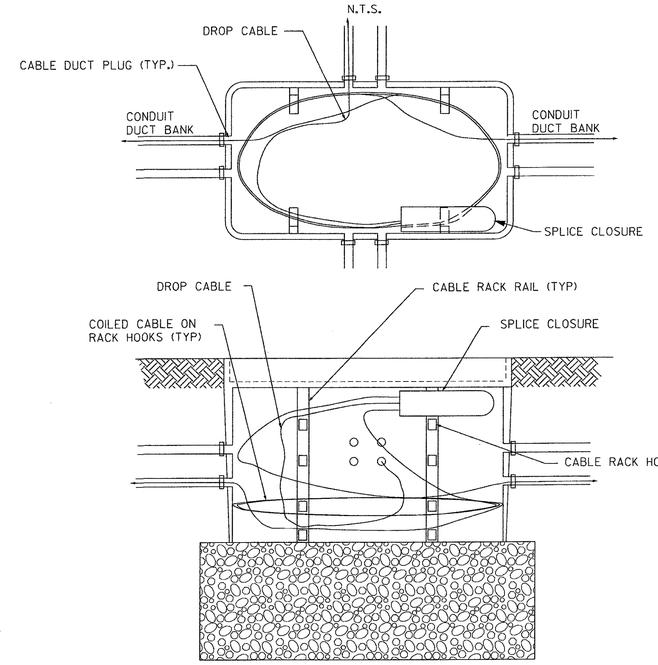

FIBER TRUNK AND DROP CABLE IN CLOSURE SHALL BE COILED TOGETHER. SEPARATE FIBER CABLES SHALL BE COILED SEPARATELY AND SUPPORTED ON SEPARATE RACK HOOKS.

USE ON CONSTRUCTION

PULL BOX ASSEMBLY AND INSTALLATION

GRESHAM SMITH AND PARTNERS

TRANSCORE®

OFFICE OF TRAFFIC SAFETY & DESIGN

DATE	REVISIONS
8/01/06	ELIMINATED CONFLICTS WITH GDOT SPECIAL
	PROVISION SECTIONS 647 & 925

GEORGIA DEPARTMENT OF TRANSPORTATION
I-285 SOUTHWEST ATMS
CONSTRUCTION DETAIL
PROJECT - PI 713371
COUNTY - FULTON
DATE - __/__/__ SHEET 40-17

$FILE$
$DATE$