STATE	PROJECT NUMBER	SHEET NO.	TOTAL SHEETS
GA.	CM-285-1(377)	76	258

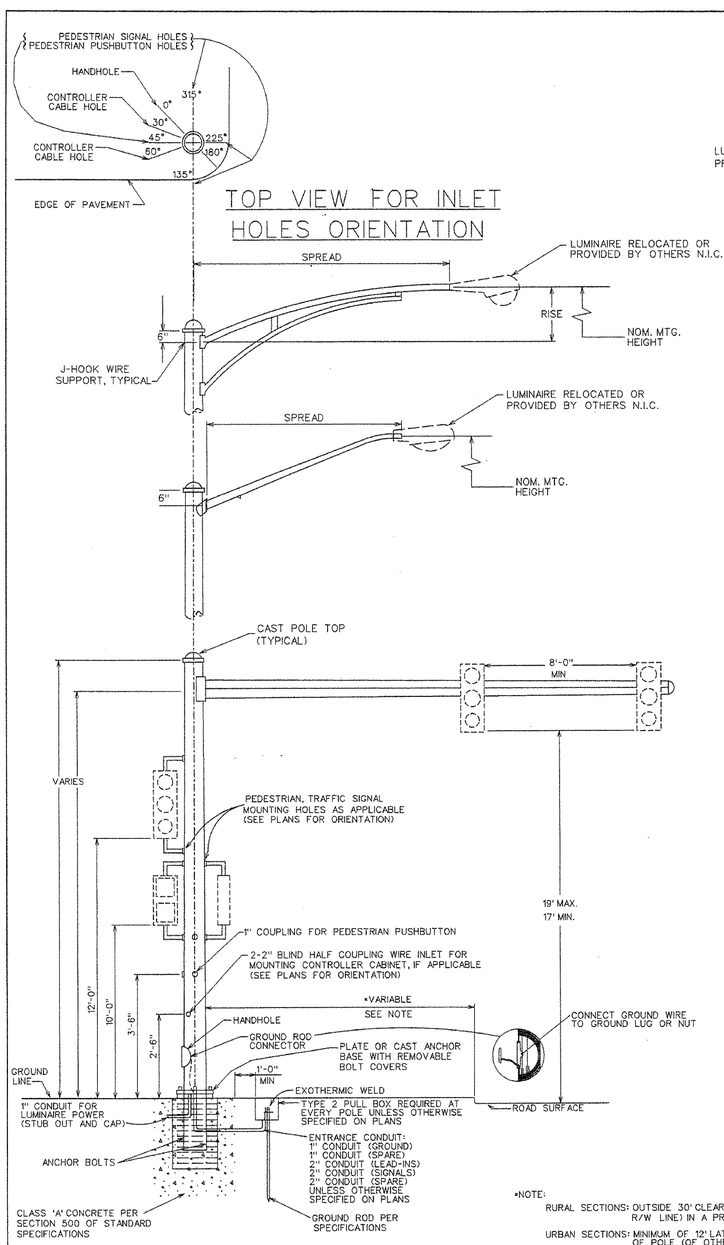

TYPICAL MAST ARM POLE DETAIL

*NOTE:

RURAL SECTIONS: OUTSIDE 30' CLEAR ROADSIDE AREA (OR AT R/W LINE) IN A PROTECTED LOCATION.

URBAN SECTIONS: MINIMUM OF 12' LATERAL CLEARANCE TO FACE OF POLE (OF OTHER OBSTACLE) OR AT R/W LINE WHICHEVER IS GREATER. 2' CLEARANCE ACCEPTABLE WITH SPEED LIMIT OF 35 MPH OR LESS.

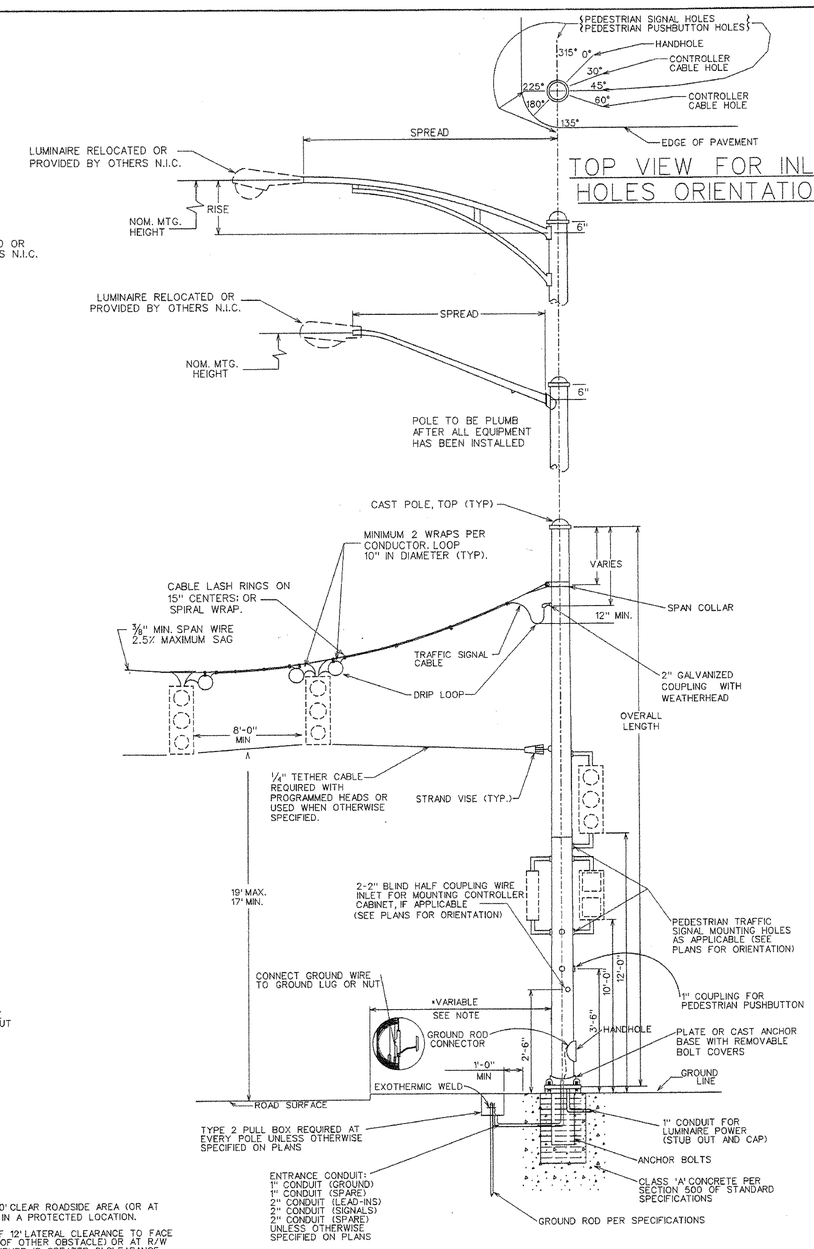

TYPICAL STEEL STRAIN POLE DETAIL

NOTES:

DRAWINGS AND OTHER DATA INDICATING POLE DIMENSIONS AND DESIGN TOGETHER WITH DESIGN OF BASE SHALL BE PREPARED BY THE CONTRACTOR AND APPROVED BY THE DEPT. ENGINEER, PER SPECIFICATIONS AND DETAILS.

FOUNDATION SIZE AND REINFORCING SHALL BE DETERMINED FROM THE "STRAIN POLE FOUNDATIONS" SHEET WITH THE USE OF THE BENDING MOMENT AT YIELD PROVIDED BY POLE MANUFACTURER.

ALL HOLES IN MAST ARMS MUST BE FABRICATED BY THE MANUFACTURER. SEE SECTION 925 OF STANDARD SPECIFICATIONS REGARDING RIGID MOUNTING HARDWARE FOR SIGNAL HEADS.

WHEN POLES ARE LOCATED ON ALL CORNERS, LUMINAIRES ARE TO BE INSTALLED PERPINDICULAR TO THE FAR SIDE APPROACHING TRAFFIC.

WHEN LUMINAIRES ARE ONLY BEING INSTALLED ON TWO CORNERS, THEY SHOULD BE INSTALLED PERPINDICULAR TO THE FAR SIDE APPROACHING TRAFFIC ON THE MAJOR APPROACH.

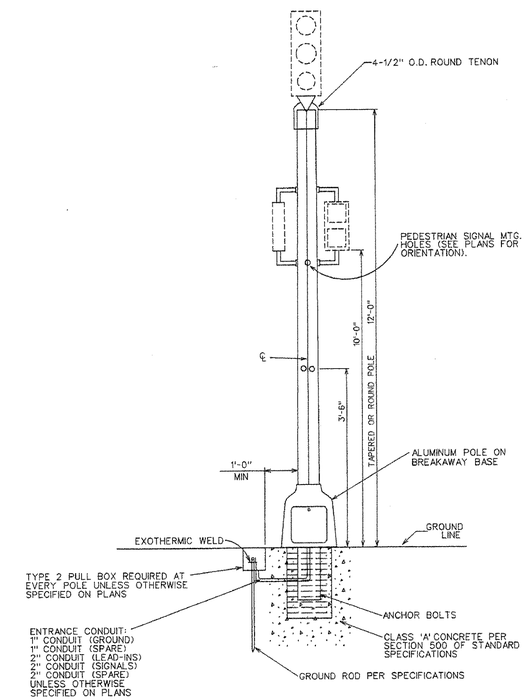

PEDESTAL POLE MOUNTED SIGNAL HEAD

DATE	REVISIONS
06/00	
09/01	REPOSITIONED SIGNAL HEADS ON MAST ARMS

GEORGIA DEPARTMENT OF TRANSPORTATION
OFFICE OF TRAFFIC SAFETY & DESIGN

DETAILS OF
METAL TRAFFIC SIGNAL
SUPPORT STRUCTURES

NO SCALE — DECEMBER 1998

TS-04

PCBDT.B

USERNAME = ewatts DGN = TS-04.dgn 10:16:16 2002-03-22