STATE	PROJECT NUMBER	SHEET NO.	TOTAL SHEETS
GA.		821	995

WIDENED RIGHT SIDE
(DETAIL 1)

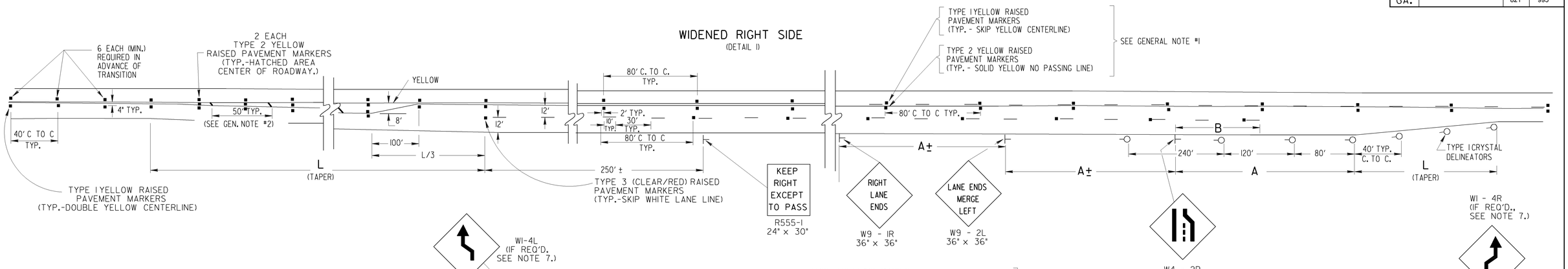

WIDENED LEFT AND RIGHT SIDES
(DETAIL 2)

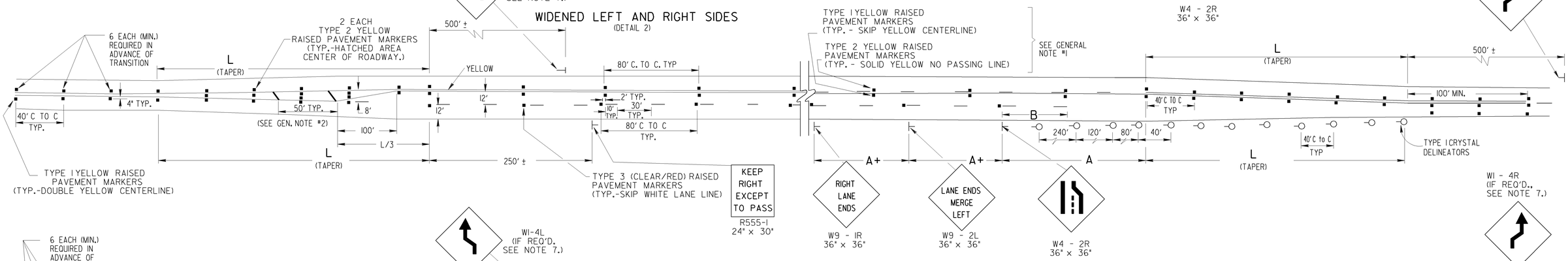

WIDENED LEFT SIDE FOR PASSING LANE ON RIGHT SIDE
(DETAIL 3)

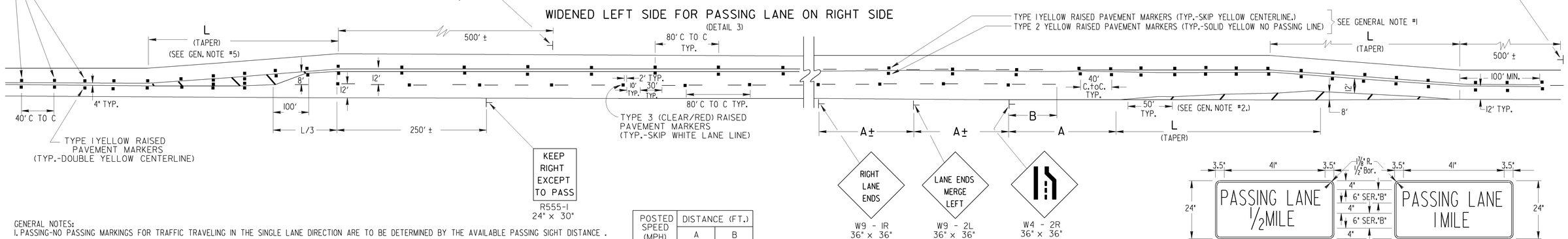

GENERAL NOTES:

1. PASSING-NO PASSING MARKINGS FOR TRAFFIC TRAVELING IN THE SINGLE LANE DIRECTION ARE TO BE DETERMINED BY THE AVAILABLE PASSING SIGHT DISTANCE .
2. DIAGONAL STRIPES ARE TO BE 24" IN WIDTH AND PLACED ON AN ANGLE OF 45^ WITH CENTERLINE. (50'C. TO C. TYP.)
3. RAISED PAVEMENT MARKERS AS SHOWN SHALL BE USED IN ALL CASES AND AS REQUIRED IN GEN. NOTE NO. 5 BELOW.
4. WHERE SPACE DOES NOT PERMIT PLACEMENT OF THE FULL SEQUENCE OF WARNING SIGNS SHOWN, THEN THE WARNING SIGN W9-2L(R) MAY BE OMITTED. IF SPACE FURTHER PROHIBITS PLACEMENT, THEN THE WARNING SIGN W9-1R(L) MAY ALSO BE OMITTED LEAVING ONLY THE W4-2R(L) SIGN. THE W4-2R(L) SIGN IS REQUIRED IN ALL CASES.
5. WHERE AN EXISTING ROADWAY IS WIDENED ON THE LEFT (SEE DETAIL 3) OF EXISTING PAVING, TO ADD A PASSING LANE, THE WIDENING SHOULD BE ACCOMPLISHED GEOMETRICALLY. IF THERE ARE NOT ANY EXISTING HORIZONTAL CURVES AT THE LOCATION OF A PASSING LANE, A TAPER OFFSET OF 1FOOT IN 55 FEET IS PERMISSABLE, RAISED PAVEMENT MARKERS SHALL BE INSTALLED WITH WIDENING ON THE LEFT SIDE AS SHOWN IN DETAIL 3 ABOVE.
6. TAPER LENGTHS SHALL BE EQUAL TO THE MINIMUM OR GREATER, BASED ON THE M.U.T.C.D. FORMULAS SHOWN BELOW.
7. W1-4 SIGNS ARE TO BE OMITTED EXCEPT AT LOCATIONS AS SPECIFIED BY THE ENGINEER.
8. EITHER A D 13-3 SIGN OR A D 13-4 SIGN, AS SPECIFIED IN THE PLANS OR BY THE ENGINEER, MAY BE REQUIRED IN ADVANCE OF EACH PASSING LANE; THESE SIGNS WILL HAVE A WHITE REFLECTORIZED LEGEND AND BORDER ON A GREEN REFLECTORIZED BACKGROUND.

POSTED SPEED (MPH)	DISTANCE (FT.)	
	A	B
55	950	475
45	750	375
35	550	275

TAPER FORMULA:

$L = S \times W$ FOR SPEEDS OF 45 M.P.H. OR GREATER
$L = WS^2/60$ FOR SPEEDS OF 40 M.P.H. OR LESS

WHERE:

L = MINIMUM LENGTH OF TAPER, IN FEET
S = POSTED SPEED LIMIT OR 85 PERCENTILE SPEED (M.P.H.)
W = WIDTH OF OFFSET, FEET

R 555-1

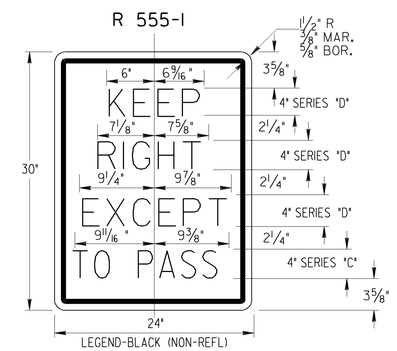

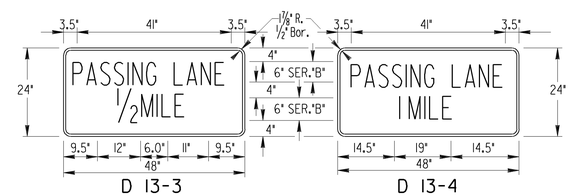

G.L.O.	REVISED SPEED-DIST. CHART	3-30-06	
R.M.U.	SPEED-DIST. CHART	12-9-96	
R.M.U.	REV. RPM TP. 3	1- 6-95	
R.M.U.	REV. GEN. NOTE No. 8	5-25-93	
R.M.U.	ADD. R 555-1 SIGN	8-16-90	
W.C.L.	NO END L.T. LANE	11-18-88	
R.M.U.	REV. TAPERS, ADD FORMULA	8- 2-85	
BY	REVISION	DATE	

DEPARTMENT OF TRANSPORTATION
STATE OF GEORGIA

STANDARD

TAPERS, SIGNS, AND MARKINGS FOR PASSING LANES

NO SCALE — FEB., 1983

DES. W.C.L.
DRW. N.M.
TRA. G.M.E.
CHK. R.M.U.

(SUBMITTED) STATE ROAD & AIRPORT DESIGN ENGINEER
(APPROVED) CHIEF ENGINEER

NUMBER 9121