STATE	PROJECT NUMBER	SHEET NO.	TOTAL SHEETS
GA.		816	995

NOTE: PANEL & LEGEND DETAILS NOT SHOWN ON THIS STANDARD. (COVERED UNDER SEPARATE DRAWINGS).

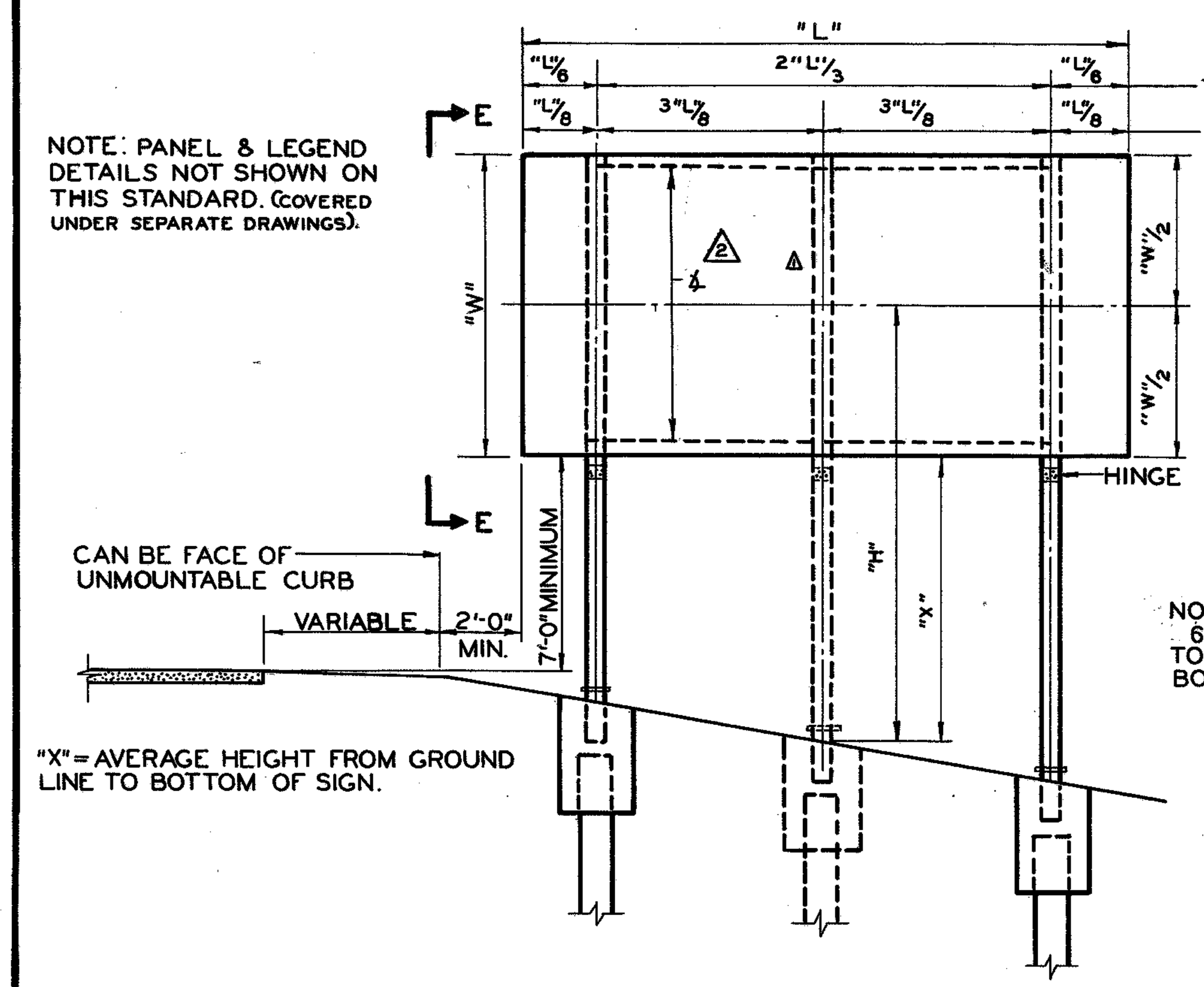

"X" = AVERAGE HEIGHT FROM GROUND LINE TO BOTTOM OF SIGN.

TYPICAL SIGN ERECTION DETAILS

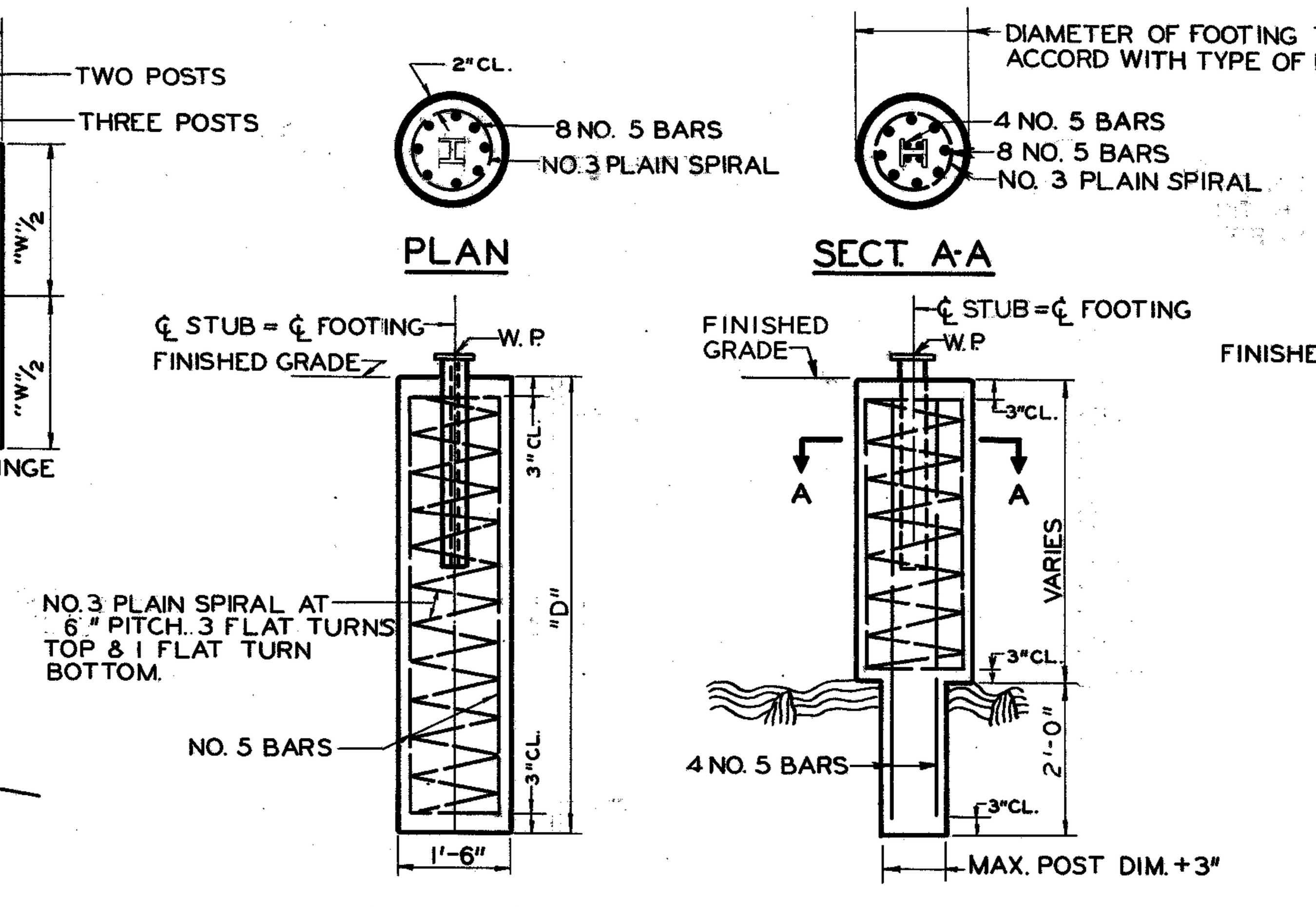

TYPE 1 FOOTING DETAILS
(USE DETAIL "A" IF ROCK IS ENCOUNTERED)

NOTE: STUB POST SIZE SAME AS FOR SIGN POST.

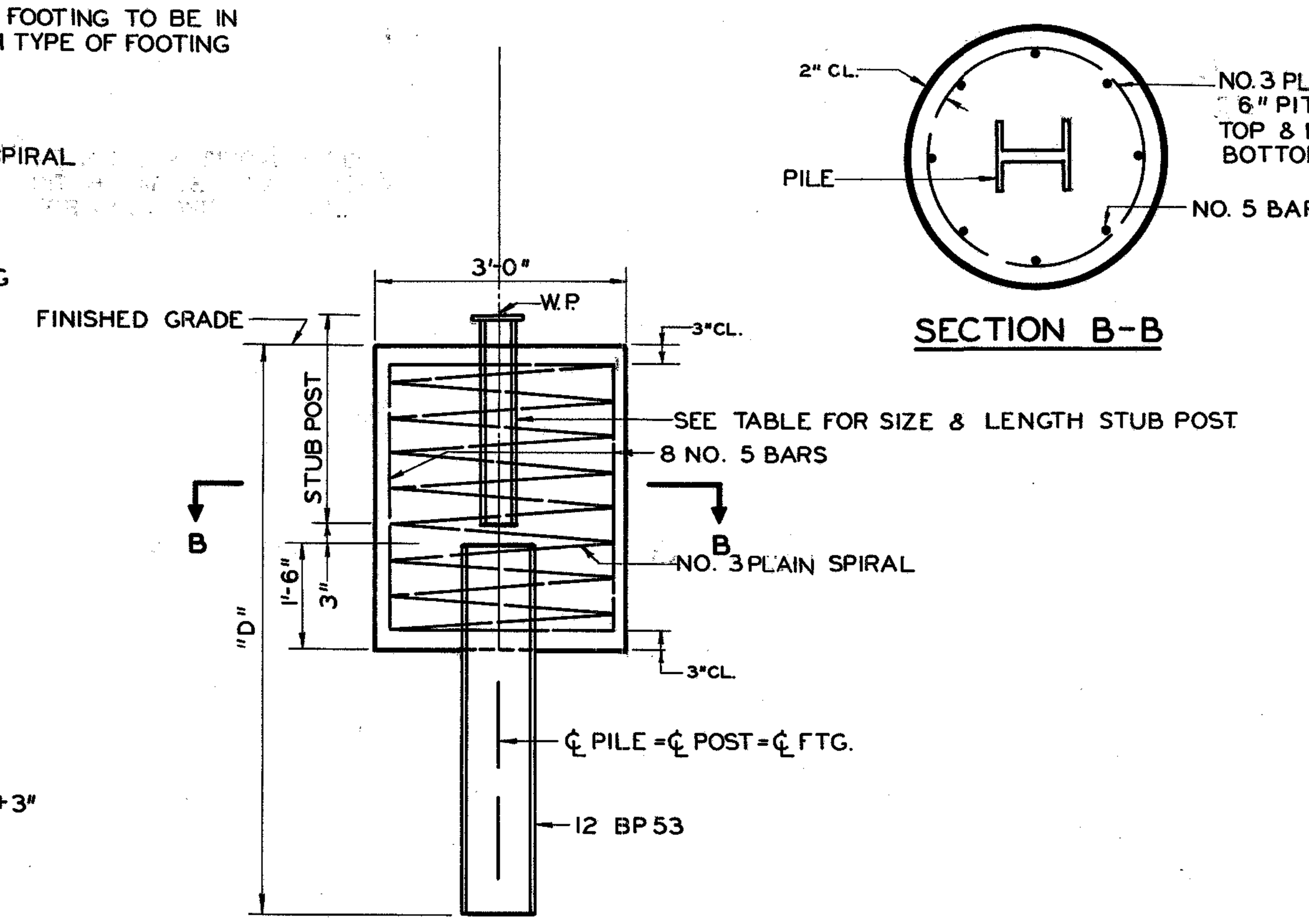

*TYPE 3 FOOTING DETAILS

*FOR TYPE 3 FOOTINGS WITH LESS THAN 4'-6½" EARTH COVER TO ROCK, BUILD FOOTINGS ACCORDING TO DETAIL "A". THE DIAMETER OF THE UPPER CONCRETE PORTION OF THE FOOTING WILL BE 3'-0". SHOULD 4'-6½" OR MORE OF EARTH COVER EXIST BUT LESS THAN "D" SECURELY SOCKET PILE INTO ROCK STRATA 1'-0"±. PILE SHALL BE EXTENDED INTO CONCRETE 1'-6".

IN CASE THE PILE CAN NOT BE SECURELY SOCKETED INTO ROCK 1'-0"±, THE SIGN MAY BE MOVED UP TO 50 FEET UP OR DOWN THE ROAD TO OBTAIN A BETTER FOUNDATION.

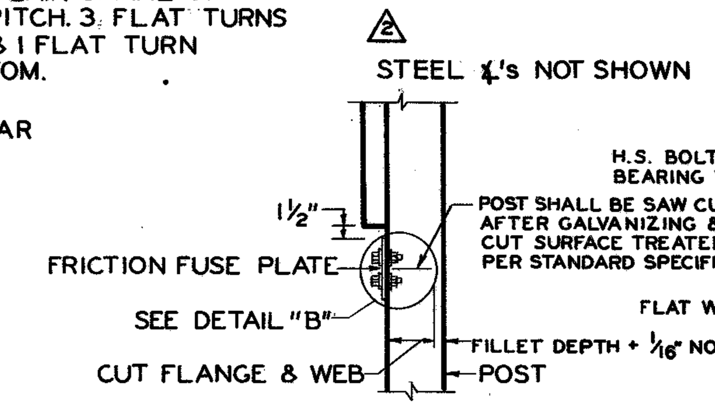

TYPICAL SIDE VIEW OF HINGE

NOTE: FLANGE HOLES FOR HINGE SHALL BE DRILLED OR SUB-PUNCHED & REAMED.

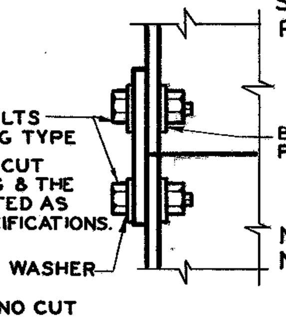

NOTE: INSTALL FUSE WITH NOTCHES TOWARD BASE.

DETAIL "B"

FABRICATOR NOTE: IMPORTANT—ALL FRICTION FUSE BOLTS SHALL BE TIGHTENED IN THE SHOP FOLLOWING A METHOD APPROVED BY THE ENGINEER. TIGHTENING SHALL BE TO SUCH A DEGREE AS TO OBTAIN THE FOLLOWING MINIMUM RESIDUAL TENSIONS IN EACH BOLT.

BOLT SIZE	MIN. RESIDUAL BOLT TENSION
½"Φ	12,050 LBS.
⅝"Φ	19,200 LBS.
¾"Φ	28,400 LBS.
⅞"Φ	36,050 LBS.

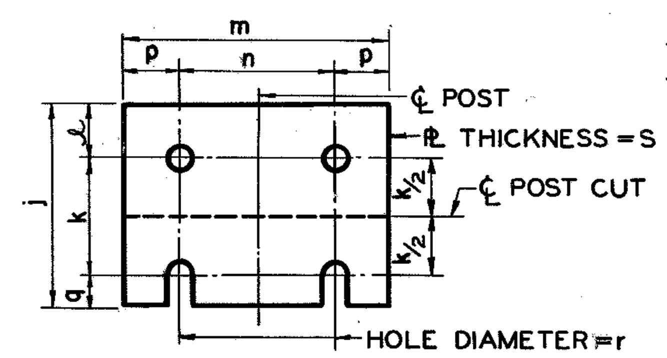

USE H.S. BOLTS WITH HEX. HD., & HEX. NUT, ONE FLAT WASHER UNDER EACH BOLT HD. & BEVEL OR FLAT WASHER (WHERE REQUIRED) UNDER EACH NUT.

FUSE PLATE DETAIL
(SEE TABLE FOR DIMENSIONS)

DESIGN DATA

ADAPTED FROM THE STATE HIGHWAY DEPARTMENT OF TEXAS. DESIGN WIND VELOCITY AS SHOWN.

POST SIZE △3 \ DIM.	BASE CONNECTION DATA TABLE: BOLT SIZE & TORQUE	a	b	c	d	e	f	g	h	i	FUSE PLATE DATA TABLE: j	k	ℓ	m	n	p	q	r	s	BOLT DIA.	STUB POST DATA: STUB LENGTH	STUB PROJECTION
S 3x5.7	½"ΦX2½" TORQUE = 200"#	SEE DETAIL									3⅛"	1½"	1⅛"	2⅝"	1½"	9/16"	½"	9/16"	¼"	½"Φ	1'-6"	3½"
S 4x7.7											3⅛"	1½"	1⅛"	2⅝"	1½"	9/16"	½"	9/16"	¼"	½"Φ	1'-6"	3½"
W 6x9	⅝"ΦX2¾" TORQUE = 450"#	5"	2"	1¼"	2¾"	1⅛"	¾"	½"	¼"	11/32"	3⅝"	2"	1⅛"	4"	2¼"	⅞"	½"	9/16"	¼"	½"Φ	2'-0"	3"
W 6x12											3¾"	2"	1⅛"	4"	2¼"	⅞"	⅝"	11/16"	⅜"	⅝"Φ	2'-0"	3"
W 6x15											4½"	2½"	1¼"	6"	3½"	1¼"	¾"	13/16"	½"	¾"Φ	2'-6"	3"
W 8x18											4½"	2½"	1¼"	5¼"	2¾"	1¼"	¾"	13/16"	½"	¾"Φ	2'-6"	3"
W 8x21	¾"ΦX3½" TORQUE = 750"#	6"	2¼"	1⅜"	3½"	1¼"	1"	¾"	5/16"	13/32"	4⅞"	2½"	1½"	5¼"	2¾"	1¼"	⅞"	15/16"	9/16"	⅞"Φ	3'-0"	2½"
W 10x22											5⅜"	3"	1½"	5¾"	2¾"	1½"	⅞"	15/16"	9/16"	⅞"Φ	3'-0"	2½"
W 10x26											5⅜"	3"	1½"	5¾"	2¾"	1½"	⅞"	15/16"	9/16"	⅞"Φ	3'-0"	2½"
W 12x26											5⅜"	3"	1½"	6½"	3½"	1½"	⅞"	15/16"	9/16"	⅞"Φ	3'-0"	2½"

PROCEDURE FOR ASSEMBLY OF BASE CONNECTION

1. ASSEMBLE POST TO STUB WITH BOLTS & WITH ONE FLAT WASHER ON EACH BOLT BETWEEN PLATES.
2. SHIM AS REQUIRED TO PLUMB POST.
3. TIGHTEN ALL BOLTS TO THE MAXIMUM POSSIBLE WITH A 12" TO 15" WRENCH TO BED WASHERS & SHIMS & TO CLEAN BOLT THREADS. THEN LOOSEN EACH BOLT IN TURN & RETIGHTEN IN A SYSTEMATIC ORDER TO THE PRESCRIBED TORQUE. (SEE TABLE)
4. BURR THREADS AT JUNCTION WITH NUT USING A CENTER PUNCH TO PREVENT NUT LOOSENING.

GENERAL NOTES

1. SPECIFICATIONS - GEORGIA STANDARD AND/OR SPECIAL PROVISIONS.
2. ALL CONCRETE SHALL BE CLASS "A".
3. △2 ALL STRUCTURAL STEEL SHALL BE A.S.T.M. DESIGNATION A-36 & SHALL BE GALV. AFTER FABRICATION IN ACCORDANCE WITH A.S.T.M. SPECIFICATION A-123 & A-153 (EXCEPT AS NOTED AT FUSE PLATES). ALL HOLES SHALL BE DRILLED◎ & ALL CUTS SHALL PREFERABLY BE SAW CUTS. FLAME CUTTING WILL BE PERMITTED PROVIDED ALL EDGES ARE GROUND FLAT & SMOOTH. STEEL ∠'s SHALL BE A-36.
4. ALL HIGH STRENGTH BOLTS, NUTS, & WASHERS SHALL CONFORM TO A.S.T.M. A-325. TIGHTEN THE HIGH STRENGTH BOLTS IN THE BASE CONNECTION ONLY TO THE TORQUE SHOWN IN THE TABLE. DO NOT OVERTIGHTEN.
5. POSTS MUST BE PLUMB & LOCATED AS SPECIFIED.
6. THE FACE OF ALL FLANGES OF POSTS SHALL BE IN THE SAME PLANE.
7. SIGN FACES SHALL BE ORIENTED TO AVOID SPECULAR REFLECTION ORDINARILY BY A SLIGHT TURNING AWAY FROM THE ROADWAY OF APPROXIMATELY 3 DEGREES. CARE SHALL BE TAKEN TO KEEP THE ADJUSTMENT SMALL SO AS TO MAINTAIN ADEQUATE REFLECTIVE VALUES.
8. EXCAVATION - DURING EXCAVATION, SURROUNDING SOIL SHALL REMAIN UNDISTURBED. ANY BACKFILLING REQUIRED SHALL BE DONE IN ACCORDANCE WITH THE STANDARD SPECIFICATIONS.
9. FOR FIELD REPAIR OF DAMAGE TO SPELTER COATING DUE TO WELDING OR OTHER CAUSES, SEE THE STANDARD SPECIFICATIONS.
10. OTHER REQUIREMENTS - FOR GENERAL NOTES & CONTRACT REQUIREMENTS, SEE SPECIAL PLANS, SUPPLEMENTAL SPECS. & SPECIAL PROVISIONS.
11. PILES SHALL CONFORM TO THE STANDARD SPECIFICATIONS.

◎ EXCEPT AS NOTED.

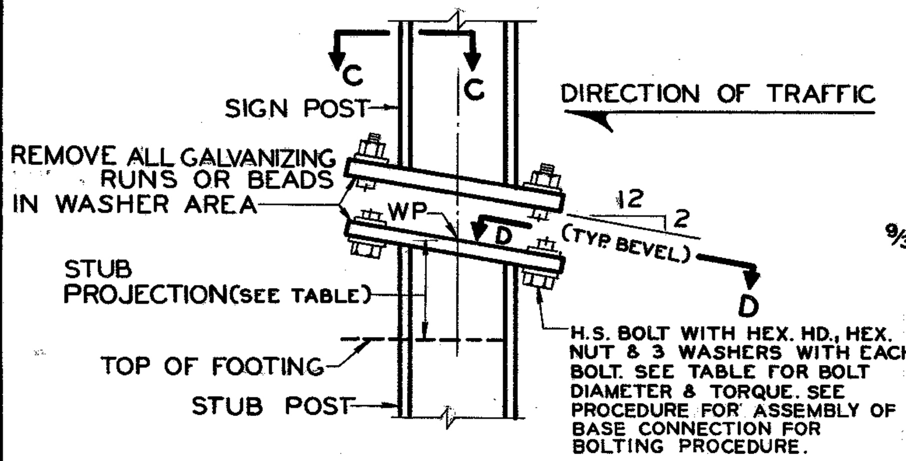

SIGN POST AND STUB POST
ELEVATION FOR S SHAPES △3

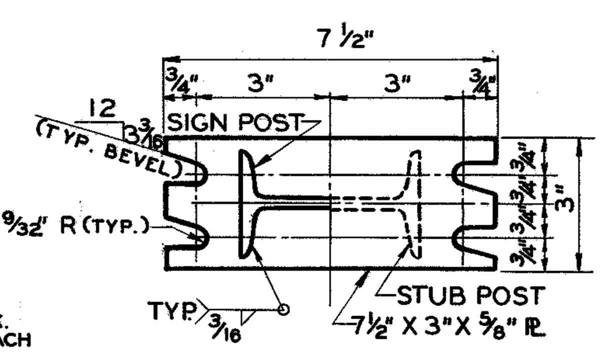

SECTION C-C SECTION D-D

SECTIONS SHOWN ARE FOR INSTALLATIONS ON RIGHT SHOULDER & IN GORE. PLATE SLOT BEVELS ARE OPPOSITE HAND FROM THAT SHOWN FOR INSTALLATIONS ON LEFT SHOULDER.

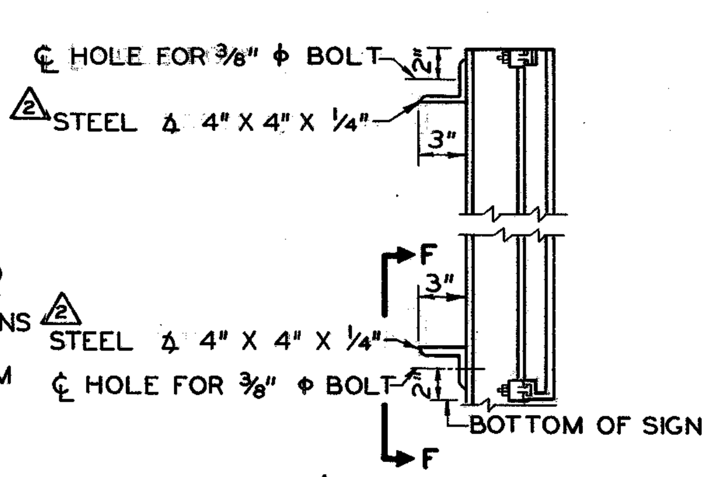

△2 STEEL ∠ DETAIL
SECTION E-E

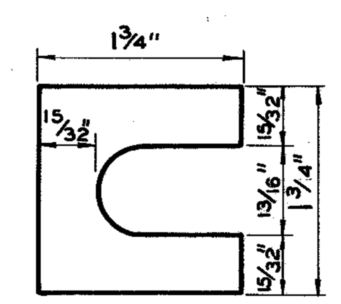

FURNISH 2, .012"± THICK & 2, .032"± THICK SHIMS PER POST. SHIMS SHALL BE FABRICATED FROM BRASS SHIM STOCK OR STRIP CONFORMING TO A.S.T.M. - B 36.

SHIM DETAIL

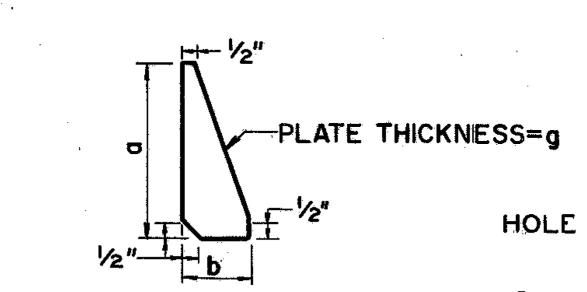

STIFFENER PLATE DETAIL
(SEE TABLE FOR DIMENSIONS)

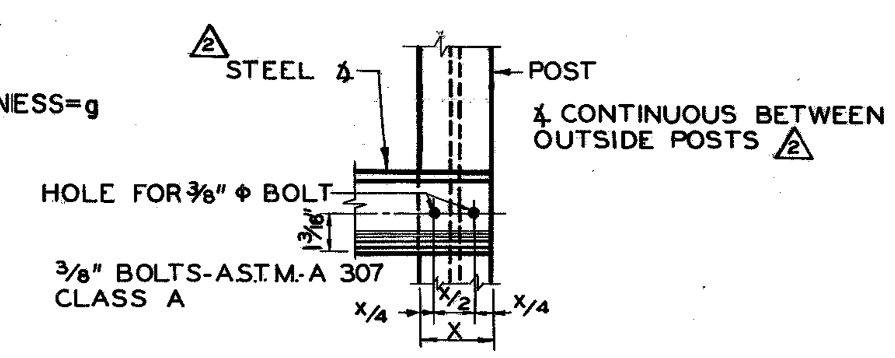

SECTION F-F

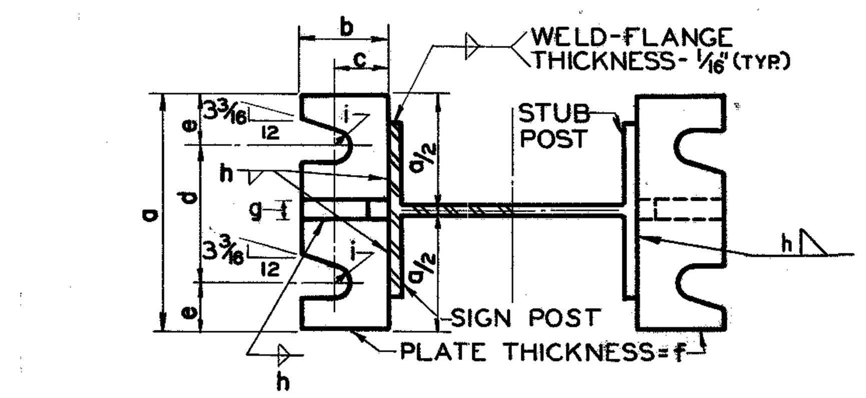

SECTION G-G SECTION H-H
(SEE TABLE FOR DIMENSIONS)

NOTE: SECTIONS SHOWN ARE FOR INSTALLATIONS ON RT. SHOULDER & IN GORE. PLATE SLOT BEVELS ARE OPPOSITE HAND FROM THAT SHOWN FOR INSTALLATION ON LT. SHOULDER.

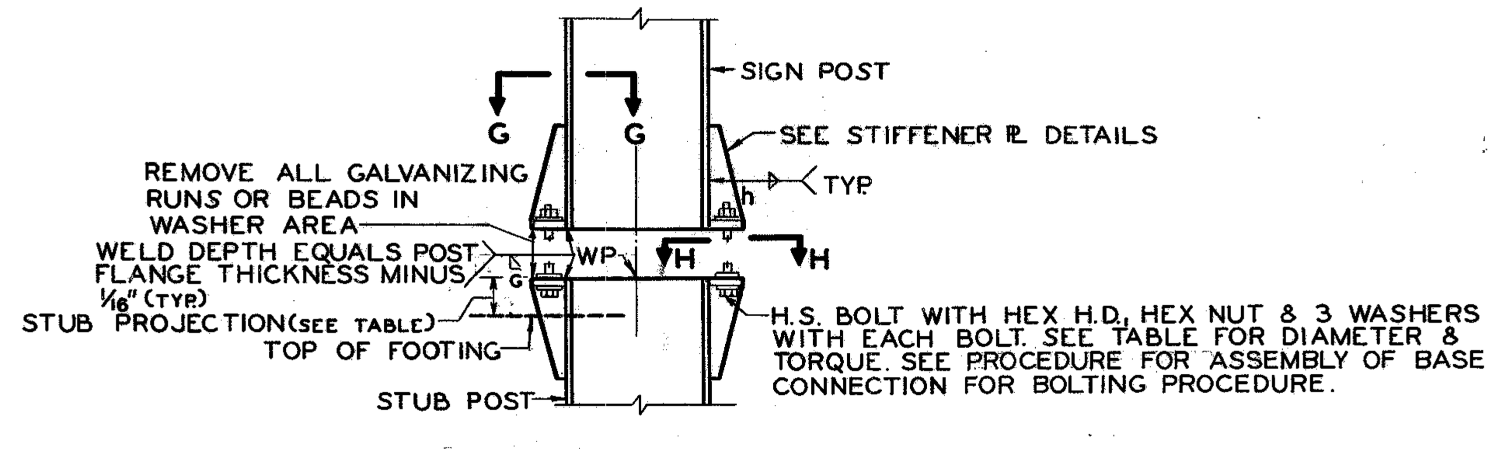

SIGN POST AND STUB POST
ELEVATION FOR S AND W SHAPES △3

	DATE	REVISIONS	BY
△	3-10-71	I BAR DESIGNATION ADDED	H.W.C.
△2	10-7-77	CH. I BARS TO ∠'S & REV. NOTE	H.W.C.
△3	10-28-81	UPDATED BEAM SIZE	R.M.U.

DEPARTMENT OF TRANSPORTATION
STATE OF GEORGIA

STANDARD
ERECTION AND FOUNDATION DETAILS
FOR SPECIAL ROADSIDE SIGNS
BREAKAWAY TYPE POSTS

NO SCALE JULY 1970

DESIGNED HWC
DRAWN MGN
TRACED CCG
CHECKED HJL

SUBMITTED R. L. Chapman Jr. BRIDGE ENGINEER
APPROVED J. O. Bacon Jr. STATE HIGHWAY ENGINEER

NUMBER 9054A