STATE	PROJECT NUMBER	SHEET NO.	TOTAL SHEETS
GA.		796	995

PRECAST CONCRETE BARRIER DETAILS

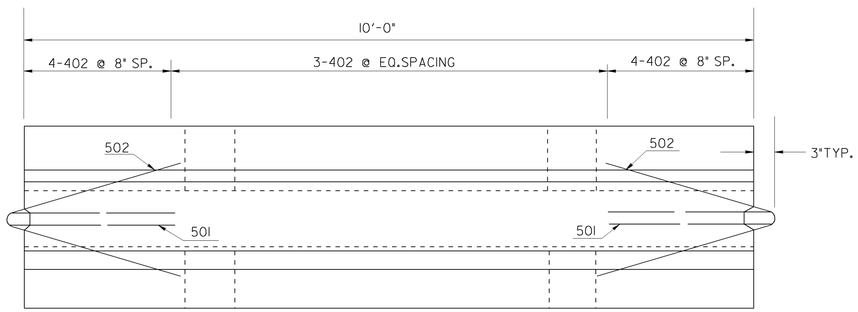

PLAN

NOTE:
BARRIER SECTIONS SHALL BE CONNECTED TOGETHER WITH THE 1¼" DIA. A-307 DOUBLE HEX CONNECTION BOLT. THE BOTTOM NUT & WASHER SHALL BE MAINTAINED BY THE CONTRACTOR FOR THE DURATION OF THE BARRIER INSTALLATION.

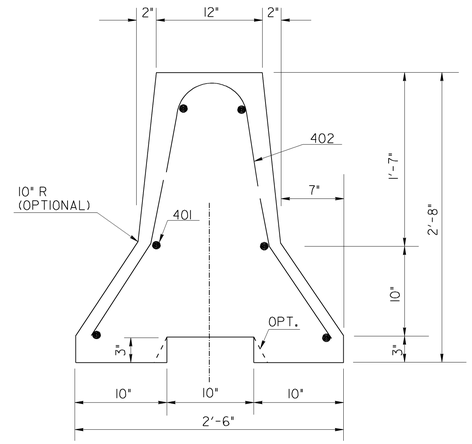

END ELEVATION

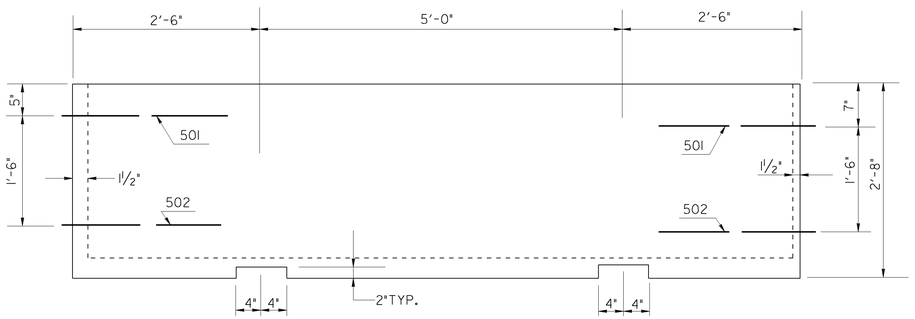

SIDE VIEW

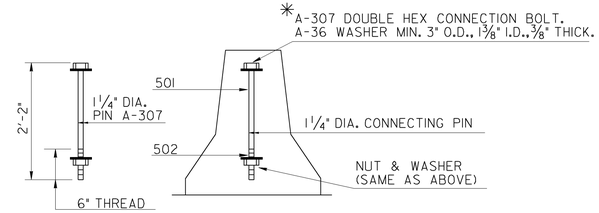

PIN CONNECTION

*AN ALTERNATE CONNECTING PIN WITH A FUSED NUT ON THE TOP THREADED PORTION AND NUT AND WASHER AS SPECIFIED ON THE BOTTOM MAY ALSO BE USED.

GENERAL NOTES:

1-MATERIALS: CLASS 'A' CONCRETE AND 40 STEEL.

2-SEE GA. SPECIFICATIONS FOR BASIS OF PAYMENT AND METHOD NO.__.

3-REINFORCEMENT, HAVING AN AREA AT LEAST EQUAL TO REBARS SHOWN, MAY BE USED AS AN ALTERNATE.

4-BARRIERS SHALL BE PLACED SUCH THAT OPENINGS BETWEEN INDIVIDUAL SECTIONS SHALL BE KEPT TO A MAXIMUM.

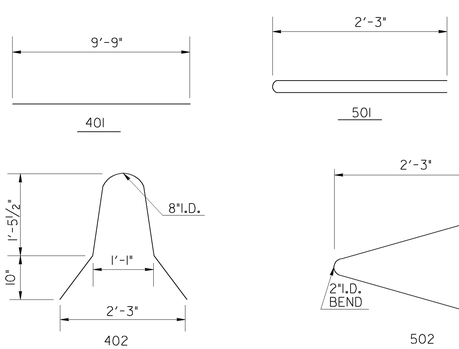

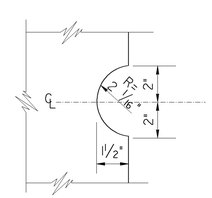

DAP DETAIL

9-8-06	REV. CONNECTION WASHER AND REV. GEN. NOTE NO. 4.	G.L.O.	
5-2-01	REV. REBAR & PIN CONN.		
5-10-96	COTTER PIN REQUIREMENT	R.M.U.	
DATE	REVISION	BY	

DEPARTMENT OF TRANSPORTATION
STATE OF GEORGIA

STANDARD
DETAILS OF PRECAST TEMPORARY BARRIERS

NO SCALE — AUG., 1995

DES. ____ DRW. ____ TRA. ____ CHK. ____

(SUBMITTED) STATE ROAD & AIRPORT DESIGN ENGR.

(APPROVED) CHIEF ENGINEER

NUMBER 4961