STATE	PROJECT NUMBER	SHEET NO.	TOTAL SHEETS
GA.		792	995

PICTORIAL VIEW (TYPE 7-C)

PICTORIAL VIEW FOR TYPE 7-R WILL BE SIMILAR TO VIEW SHOWN, BUT WITHOUT COLUMN.

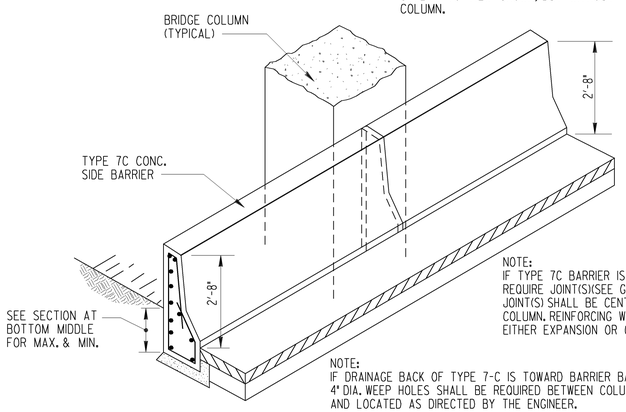

NOTE:
IF TYPE 7C BARRIER IS LONG ENOUGH TO REQUIRE JOINT(S)SEE GENERAL NOTE NO.6); THE JOINT(S) SHALL BE CENTERED IN FRONT OF A COLUMN. REINFORCING WILL NOT EXTEND THRU EITHER EXPANSION OR CONTRACTION JOINTS.

NOTE:
IF DRAINAGE BACK OF TYPE 7-C IS TOWARD BARRIER BACK, 4" DIA. WEEP HOLES SHALL BE REQUIRED BETWEEN COLUMNS AND LOCATED AS DIRECTED BY THE ENGINEER.

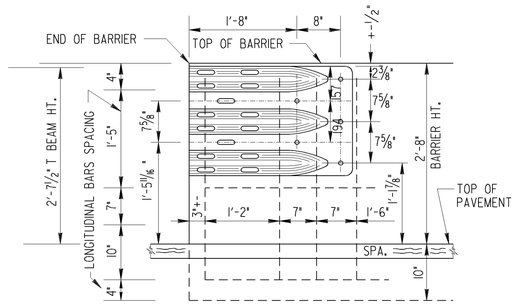

NOTE:
SEE STANDARD 4270 FOR DETAILS OF GUARDRAIL, SPECIAL END SHOE, 1/2" GALV. PLATE AND RELATED ITEMS.

ELEVATION (TYPE 7-T)

(GUARDRAIL ATTACHMENT)

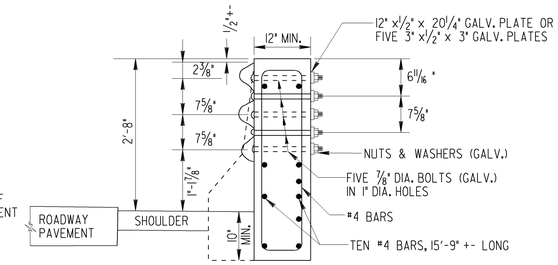

SECTION B-B (TYPE 7-T)

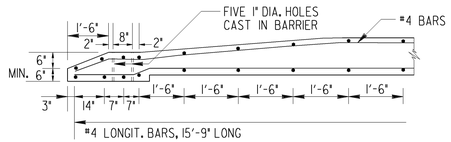

REINFORCING FOR TYPE 7-T

PICTORIAL VIEW (TYPE 7-W)

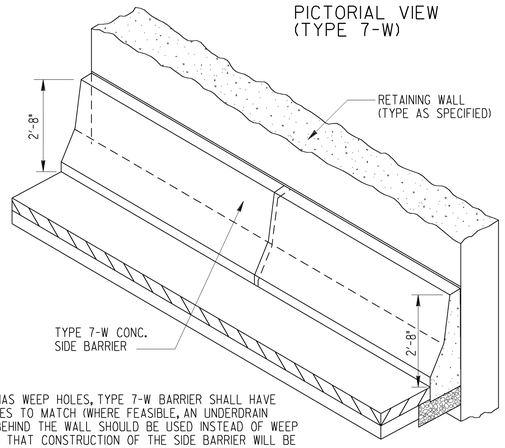

NOTE:
IF WALL HAS WEEP HOLES, TYPE 7-W BARRIER SHALL HAVE WEEP HOLES TO MATCH (WHERE FEASIBLE, AN UNDERDRAIN SYSTEM BEHIND THE WALL SHOULD BE USED INSTEAD OF WEEP HOLES, SO THAT CONSTRUCTION OF THE SIDE BARRIER WILL BE EASIER, IF PLANS SPECIFY WEEP HOLES THRU WALL, THE CONTRACTOR AT HIS OPTION MAY SUBSTITUTE AN APPROVED UNDERDRAIN SYSTEM FOR NO ADDITIONAL PAYMENT.)

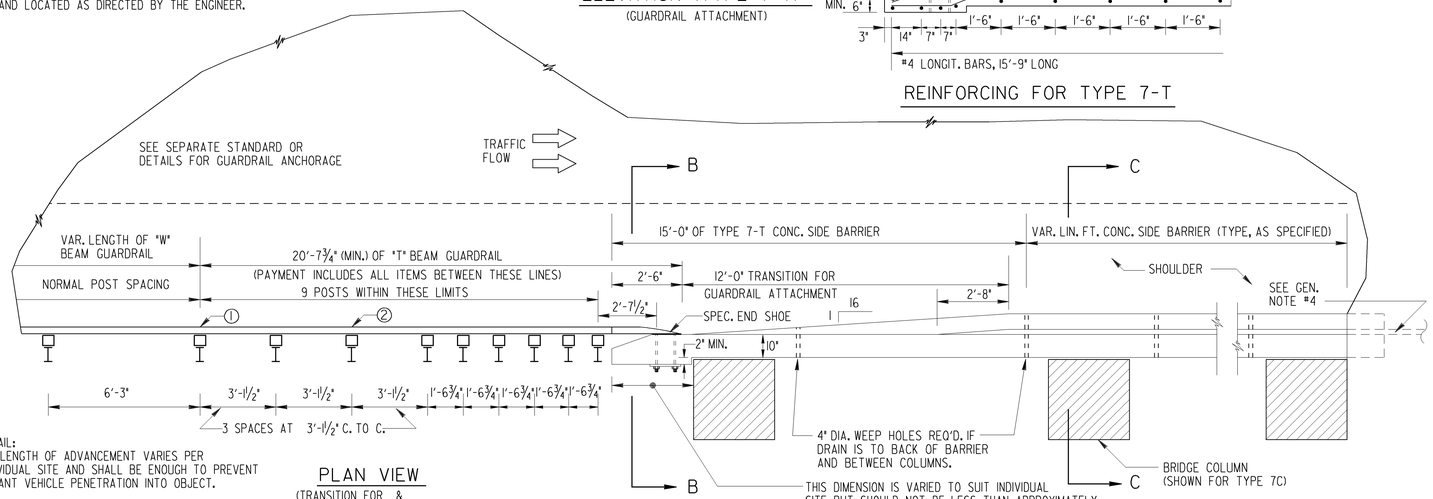

GUARDRAIL:
-- THE LENGTH OF ADVANCEMENT VARIES PER INDIVIDUAL SITE AND SHALL BE ENOUGH TO PREVENT ERRANT VEHICLE PENETRATION INTO OBJECT.

-- POSTS & OFFSET BLOCKS DEPICTED FOR GUARDRAIL ARE TYPICAL. NORMAL CONSTRUCTION TOLERANCES ARE ALLOWED FOR SPACINGS.

PLAN VIEW

(TRANSITION FOR & ATTACHMENT TO GUARDRAIL)

① "T" BEAM TO "W" BEAM GUARDRAIL TRANSITION SECTION (STD. 4270)

② DOUBLE THICKNESS (ONE RAIL SECTION INSET IN ANOTHER) "T" BEAM GUARDRAIL

THIS DIMENSION IS VARIED TO SUIT INDIVIDUAL SITE, BUT SHOULD NOT BE LESS THAN APPROXIMATELY 3 FT. TO ALLOW ROOM FOR CONNECTING GUARDRAIL. CONCRETE SIDE BARRIER SHOULD BEGIN AT A POINT WHICH WILL PROVIDE A NEAT AND DESIRABLE RELATION WITH ADJACENT ELEMENTS, SUCH AS CONCRETE SLOPE PAVING, SHOULDER PAVING, BACK SLOPE, DITCH, GUTTER, ETC. EXACT LOCATION WILL BE AS SHOWN IN THE PLANS AND/OR AS DIRECTED BY THE ENGINEER.

GENERAL NOTES:

1. SPECIFICATIONS: GEORGIA STANDARD, CURRENT EDITION & SUPPLEMENTS THERETO. ALL CONCRETE SHALL BE CLASS "A". SURFACE FINISHES REQUIRED ONLY WHERE SPECIFIED; SEE SECTION 500.

2. GRADE AND ALIGNMENT OF BARRIER TOP SURFACE SHALL NOT VARY FROM THE ESTABLISHED LINE AND GRADE MORE THAN 1/8 IN. IN 10'-0" WHEN CHECKED WITH A STRAIGHT EDGE OF NOT LESS THAN 10'-0" IN LENGTH.

3. WHERE GUARDRAIL ATTACHMENT IS REQUIRED, PAYMENT FOR CONCRETE SIDE BARRIER, TYPE 7-T, INCLUDES THE TRANSITION, TAPER AND THE FIVE 1" DIA. HOLES, PROPERLY LOCATED, FOR CONNECTING THE SPECIAL END SHOE. PAYMENT FOR GUARDRAIL INCLUDES THE SPECIAL END SHOE, ALL CONNECTING HARDWARE, ADD'L POSTS & DOUBLE (INSET) "T" BEAM.

4. IF GUARDRAIL IS WARRANTED ON THE TRAILING END OF SIDE BARRIER WITH ONE-WAY TRAFFIC, BARRIER FACE TRANSITION AND ADDITIONAL GUARDRAIL POSTS ARE NOT REQUIRED.

5. IF THE EDGE OF THE TRAVEL LANE TO THE FACE OF THE CONCRETE BARRIER IS MORE THAN APPROXIMATELY 15 FT., CONSIDERATION SHOULD BE GIVEN TO CONTINUING GUARDRAIL RATHER THAN USING CONCRETE SIDE BARRIER.

6. ALL CONCRETE SIDE BARRIERS OVER 20 FT. IN LENGTH SHALL HAVE CONTRACTION JOINTS AT 20 FT. MAXIMUM SPACINGS. IF SAWED, CONTRACTION JOINT CUT SHALL BE 1/4" WIDE AND 2" DEEP. ALL CONCRETE SIDE BARRIERS OVER 400 FT. IN LENGTH SHALL HAVE EXPANSION JOINTS AT 400 FT. MAXIMUM SPACINGS. A 1" PREFORMED, JOINT FILLER SHALL BE USED AT THE EXPANSION JOINTS. DISTANCE BETWEEEN JOINTS SHOULD BE EQUAL (APPROXIMATELY).

7. LOCATE OVERHEAD SIGN SUPPORTS BACK OF SIDE BARRIER IF FEASIBLE: WHERE CONDITIONS NECESSITATE LOCATION ON BARRIER TOP, SUPPORT FOOTING FOR SIGN SHALL BE DESIGNED BY CONTRACTOR, APPROVED BY THE D.O.T. PRIOR TO CONSTRUCTION. SEE SEPARATE DETAILS FOR TYPE 26 SIDE BARRIER IF REQUIRED.

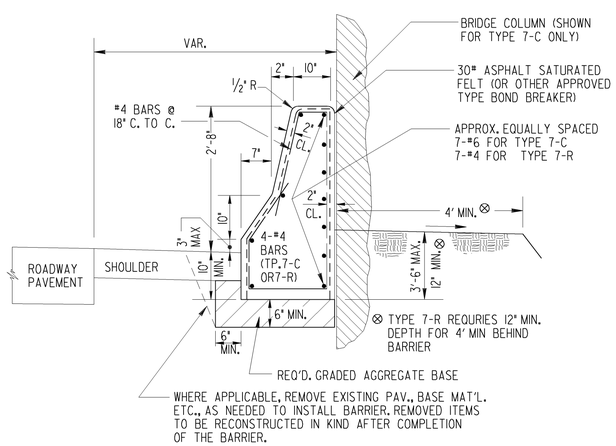

SECTION C-C (FOR TYPE 7-C OR 7-R)

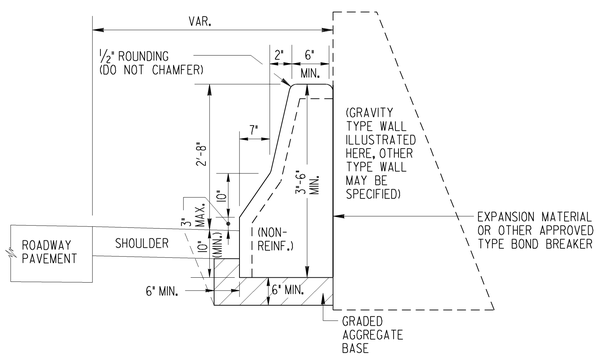

- VOIDS WILL NOT BE PERMITTED BETWEEN BARRIER AND WALL. OPENINGS WILL BE GROUT FILLED.

TYPE 7-W

BARRIER TYPE LOCATIONS	
TYPE	LOCATION
7-C	AT BRIDGE COLUMNS
7-R	ALONG ROASIDE-FREESTANDING, MIN. 12" DEPTH BEHIND BARRIER FOR 4' MIN.
7-W	ALONG RETAINING WALL (TYPE AS SPECIFIED); BUT NOT ALONG SOUND BARRIER.
7-T	AT GUARDRAIL ATTACHMENT

DATE	DEPARTMENT OF TRANSPORTATION STATE OF GEORGIA	
REVISION	STANDARD CONCRETE SIDE BARRIER TYPES 7-C,7-R,7-T,7-W	DEC., 1999
BY	DES. ____ (SUBMITTED) STATE ROAD & AIRPORT DESIGN ENGR. DRW. ____ TRA. ____ CHK. ____ (APPROVED) CHIEF ENGINEER	NUMBER 4948A