STATE	PROJECT NUMBER	SHEET NO.	TOTAL SHEETS
GA.		772	995

CIRCULAR PRECAST REINFORCED CONCRETE SECTIONS

ADAPTER TYPE I

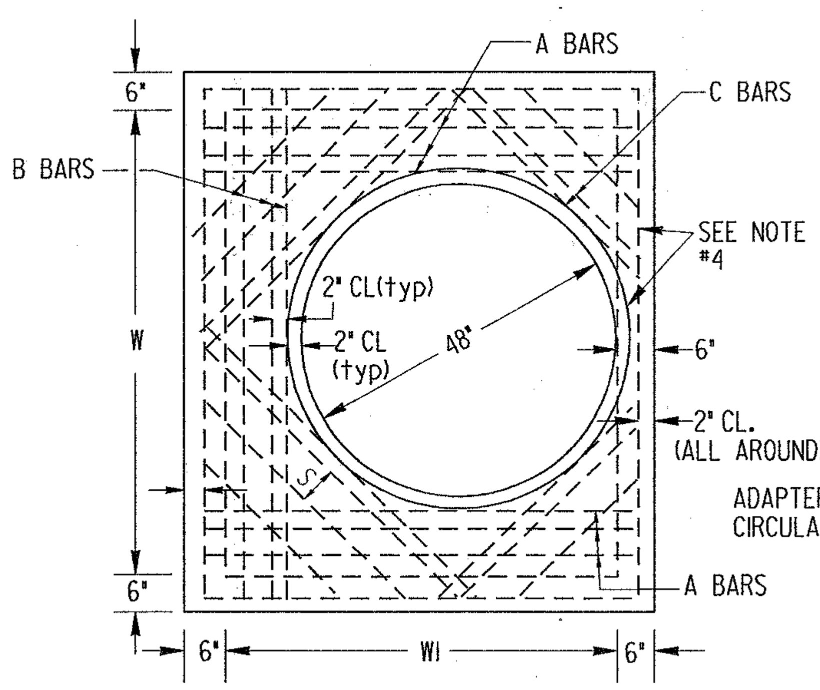

PLAN OF REINFORCING STEEL

NOTE:

WHERE W=48" (ONLY) A BARS NOT REQUIRED

WHERE WI = 48" (ONLY) B BARS NOT REQUIRED

FOR CONSTRUCTION OF BOX TYPE BASES AND W AND WI DIMENSIONS, SEE APPLICABLE STANDARDS FOR CATCH BASINS OR DROP INLETS.

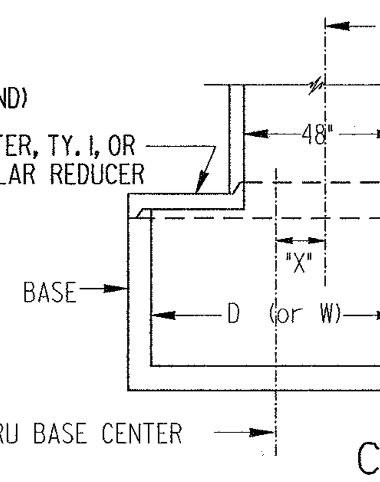

D (or W)	"X"
54"	3"
60"	6"
72"	1'-0"
78"	1'-3"
84"	1'-6"

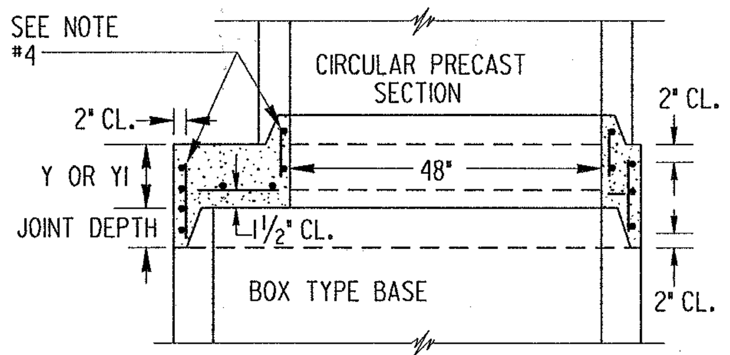

SECTIONAL DETAIL

FIRST 2 BARS SPACED WITH 2" CL. AS SHOWN. ALL OTHERS MAX. SPACING OF "S" C. TO C. BARS SHALL BE IN BOTTOM OF SLAB WITH 1-½" CLEARANCE.

*WHERE W AND WI DIMENSIONS DIFFER, USE SLAB THICKNESS AND REINFORCEMENTS FOR LARGER DIMENSION.

Y = MIN. THICKNESS WHERE HEIGHT OF FILL IS 12 ft., OR LESS, ABOVE TOP OF ADAPTER, TYPE I, OR CIRCULAR REDUCER.
YI = MIN. THICKNESS WHERE HEIGHT OF FILL ABOVE ADAPTER, TYPE I, OR CIRCULAR REDUCER = OVER 12 ft.

W & WI or D	BAR SIZE	S (Max)	Y (Min.)	YI (Min)
48"	#4	6"	6"	6"
54"	#4	6"	8"	8"
60"	#5	6"	8"	9"
66"	#6	6"	8"	10"
72"	#6	5½"	9"	11"
84"	#6	5"	9"	12"

CIRCULAR RISER SECTIONS-
DESIGN AND STEEL REINFORCEMENT TO COMPLY WITH A.S.T.M. C-478 FOR PRECAST MANHOLE SECTIONS HT. = 1'0" TO 4'0" EACH.

KEYED JOINT REQUIRED AT ALL SECTIONS UNLESS NOTED OTHERWISE

CIRCULAR BASE UNIT-
WALL DESIGN AND REINFORCEMENT TO COMPLY WITH A.S.T.M. C-478 EXCEPT THAT MIN. (T) THICKNESS = 5" AND ALL PRECAST OPENINGS FOR PIPES SHALL HAVE TWO ADDITIONAL VERTICAL REINFORCING BARS AS SHOWN.

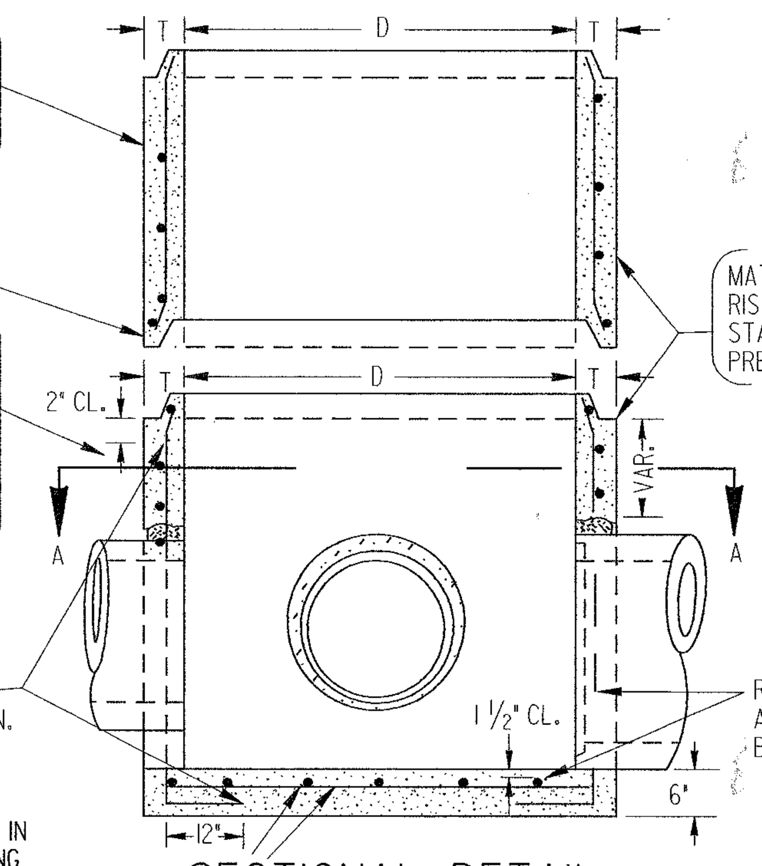

SECTIONAL DETAIL

MIN WALL THICKNESS (T)		
D	BASE	RISER
48"	5"	4"
60"	5"	5"
72"	6"	6"

MATERIALS FOR BASE UNITS AND RISERS WILL COMPLY WITH GA. STANDARD SPECIFICATIONS FOR PRECAST MANHOLE SECTIONS.

D	MAX PIPE SIZE
48"	30"
60"	42"
72"	48"

REINF. STEEL BARS IN BOTTOM MAX. SPAING 12" C. TO C. BOTH WAYS

D	BAR SIZE	NO.
48"	#5	8
60"	#5	10
72"	#6	12

CIRCULAR REDUCER SLAB

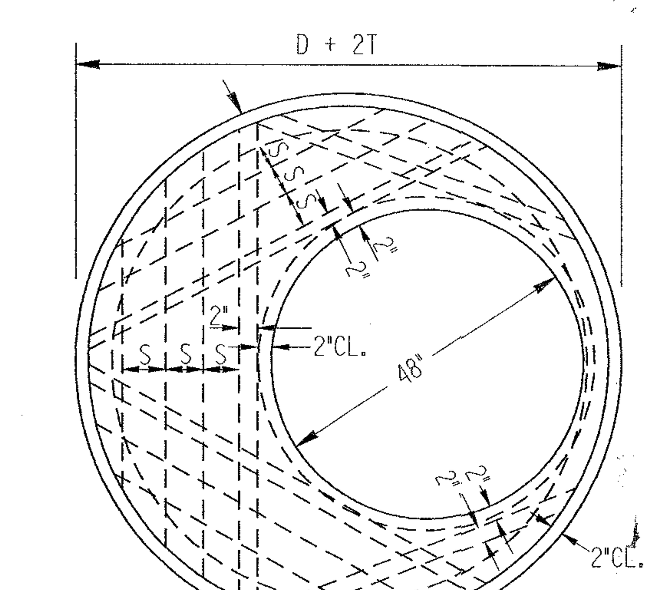

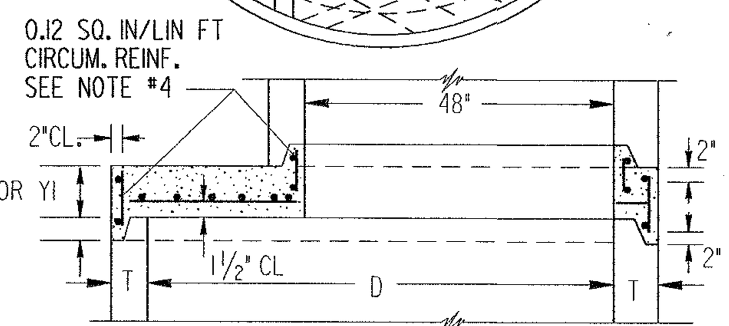

SECTIONAL DETAIL

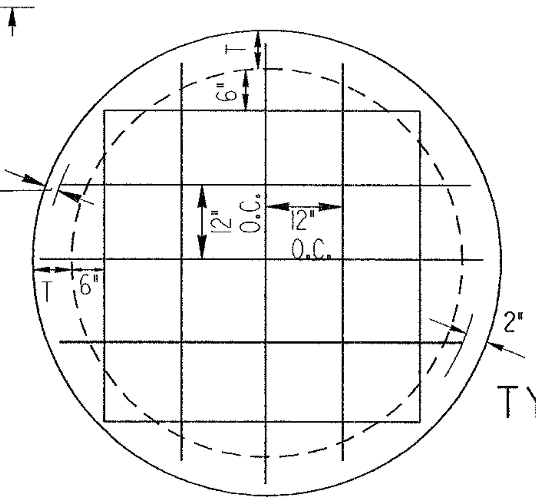

PLAN OF REINFORCING STEEL IN BOTTOM SLAB

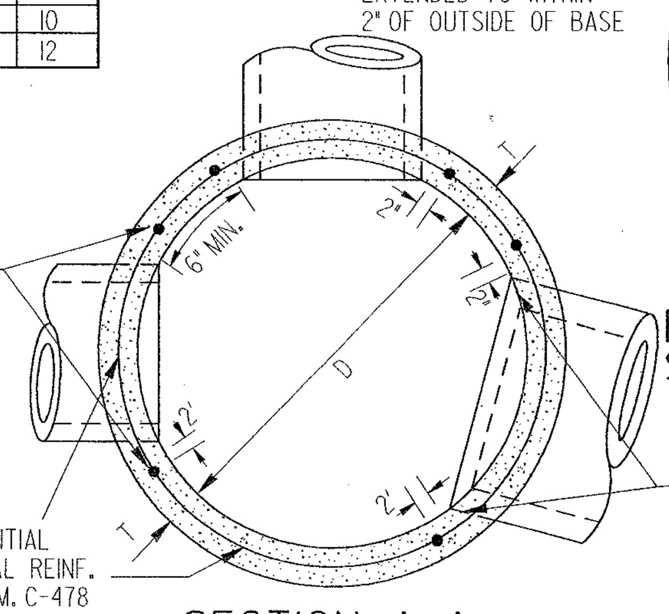

SECTION A-A

CONTRACTOR SHALL PROVIDE FABRICATOR WITH PIPE SIZES AND ALIGNMENT

ADAPTER TYPE 2

FOR USE WITH CATCH BASINS

ADAPTER, TYPE 2, MAY BE USED WITH DRAINAGE STRUCTURES OTHER THAN CATCH BASINS, IF SO NOTED ON OTHER STANDARDS OR IN THE PLANS.

ADAPTER, TYPE 3, WILL BE USED FOR STRUCTURES WHICH ARE UNDER TRAFFIC.

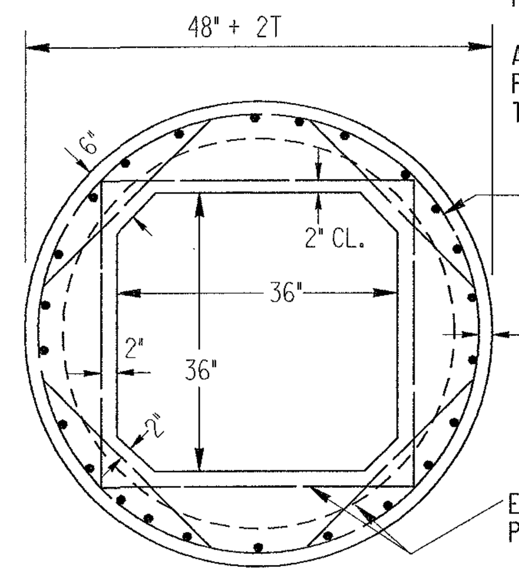

PLAN OF REINFORCING STEEL

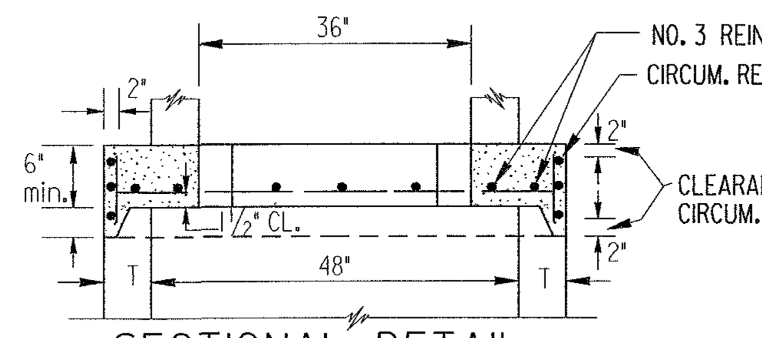

SECTIONAL DETAIL

ADAPTER TYPE 3

FOR USE WITH DROP INLETS

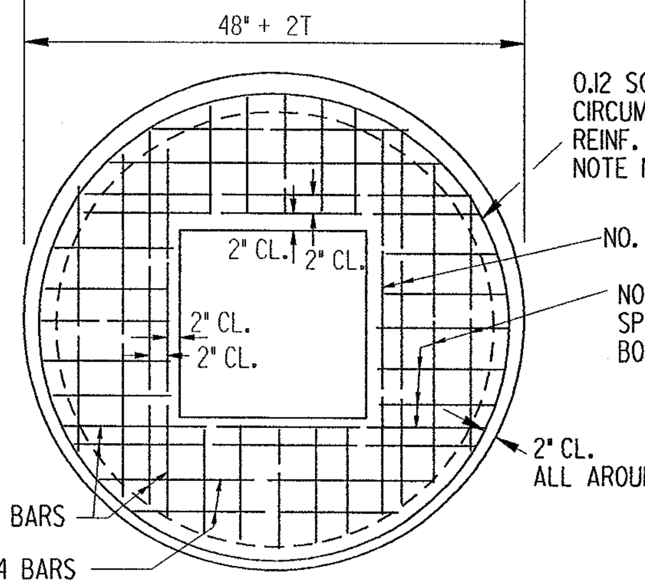

PLAN OF REINFORCING STEEL

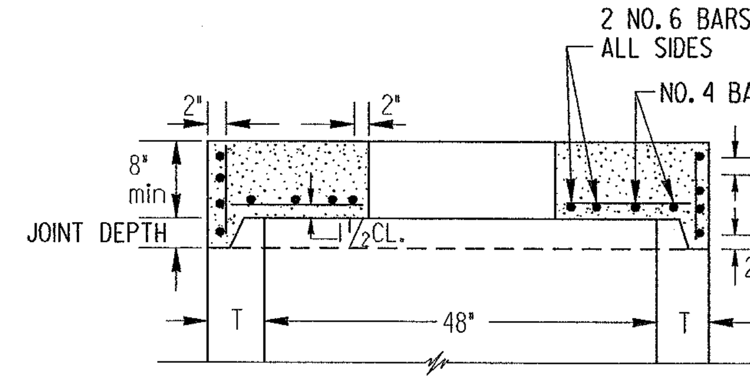

SECTIONAL DETAIL

NOTE: OPENING IN AN ADAPTER, TYPE 3, DEPENDS ON TYPE OF INLET, OPENING = 1'5" X 2'0" FOR INLET TYPES A,B,C, OR D, AND 2'0" X 2'0" FOR INLET, TYPE E (STANDARD 1019-A). FOR OTHER INLET TYPES OPENING EQUAL TO OPENING REQUIRED FOR INLET WITH BOX TYPE BASES.

TYPICAL PLAN VIEWS OF CATCH BASINS

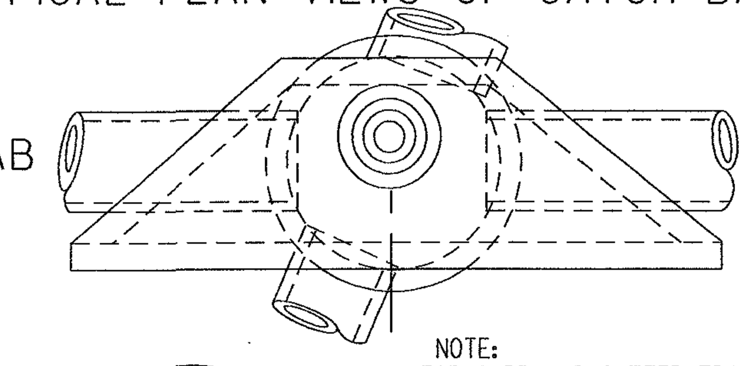

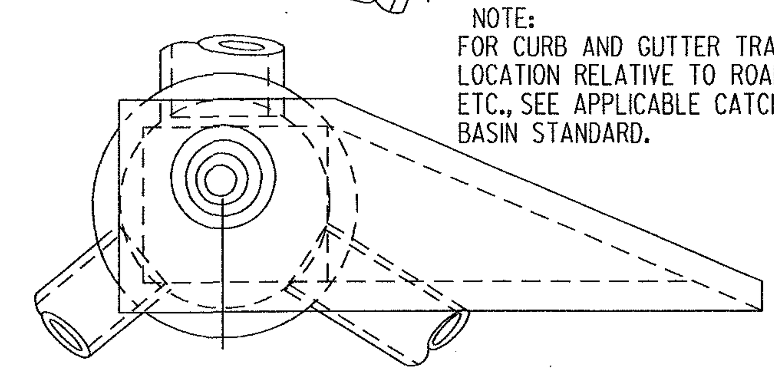

NOTE:
FOR CURB AND GUTTER TRANSITION LOCATION RELATIVE TO ROADWAY, ETC., SEE APPLICABLE CATCH BASIN STANDARD.

DETAIL FOR CENTERING CIRCULAR SECTION OF CATCH BASINS BACK OF CURB

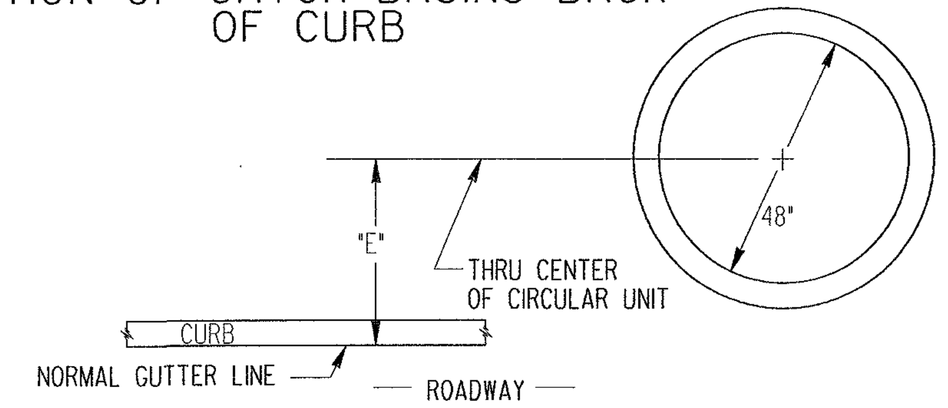

GENERAL NOTES:

1. ALL CIRCULAR SECTIONS WILL HAVE KEYED TYPE JOINT IN ACCORDANCE WITH A.S.T.M. C-478.
2. ALL OPENINGS FOR PIPES OVER 6" IN DIAMETER MUST BE PRECAST.
3. ALL ADAPTERS AND REDUCER SLABS SHALL CONTAIN, IN ADDITION TO STEEL BAR REINF. SHOWN, CIRCUMFERENTIAL REINFORCEMENT IN LIP AND EXTENDING INTO BODY OF SLAB AS SHOWN.
4. FOR CONSTRUCTION ABOVE ADAPTER, TYPE 2, AND TYPE 3, AND BELOW TYPE I, SEE APPLICABLE GA. STDS. FOR CATCH BASINS OR DROP INLETS.
5. CIRCULAR SECTIONS SHOWN ON THIS STANDARD MAY BE SUBSTITUTED FOR THE BOX TYPE BASE ON GA. STDS. AND CONSTRUCTION DETAILS FOR CATCH BASINS AND DROP INLETS, WHERE STRUCTURE HEIGHT, PIPE SIZE, AND ALIGNMENT PERMIT. SPECIFIED STRUCTURE HEIGHT SHALL BE SUFFICIENT TO ACCOMODATE THE REQUIRED BASE SIZE, ADAPTERS, RISERS, AND TOP PORTION FOR ALLOWANCE OF THE CIRCULAR ALTERNATES.

DROP INLET WITH CIRCULAR SECTIONS

SEE APPLICABLE STANDARD OR CONSTRUCTION DETAILS FOR DROP INLET DETAILS NOT SHOWN HERE.

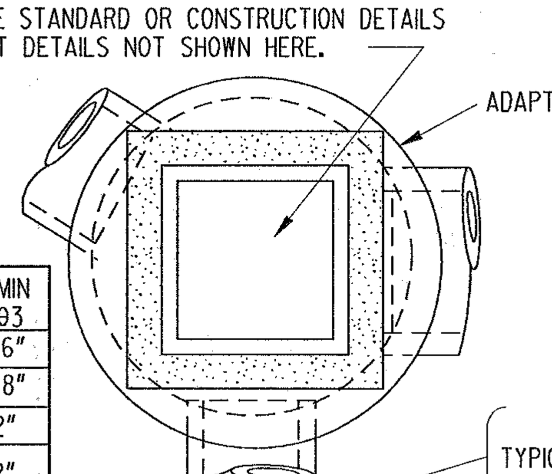

PLAN

INLET TYPE		MIN θ3
STD. 1019A	A,B,or C	6"
	D	8"
	E	12"
STD. 1019 B TYPE V1 or V2		12"
9031-S MED.		12"
DITCH D.I.		6"
STD 1010-T or "C"		8"

TYPICAL: BRICK MASONARY AND/OR CONCRETE CONSTRUCTION PER APPLICABLE SEPARATE STANDARD.

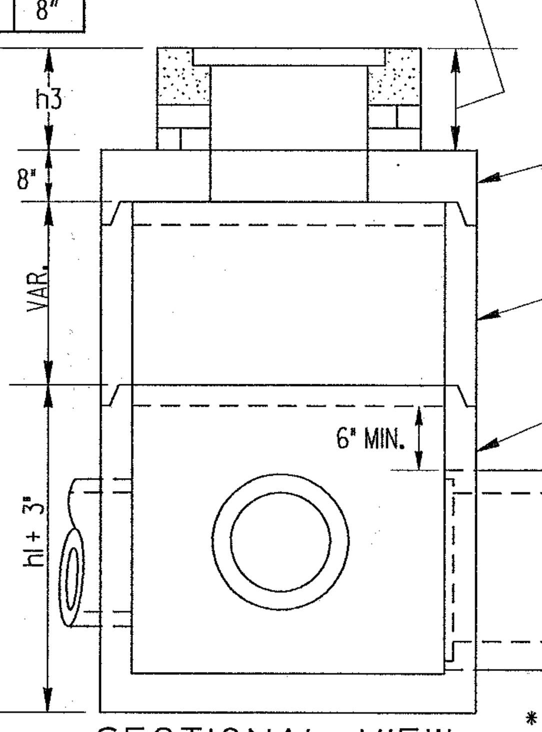

SECTIONAL VIEW

** TYPE 3 ADAPTER NOT REQUIRED FOR STD. 9031-S MEDIAN D.I. IF PRECAST APRON IS USED. (SEE STANDARD 9031-S PRECAST)

BUILT-IN-PLACE CIRCULAR BASE

(BRICK MASONRY OR CLASS "A" CONCRETE)

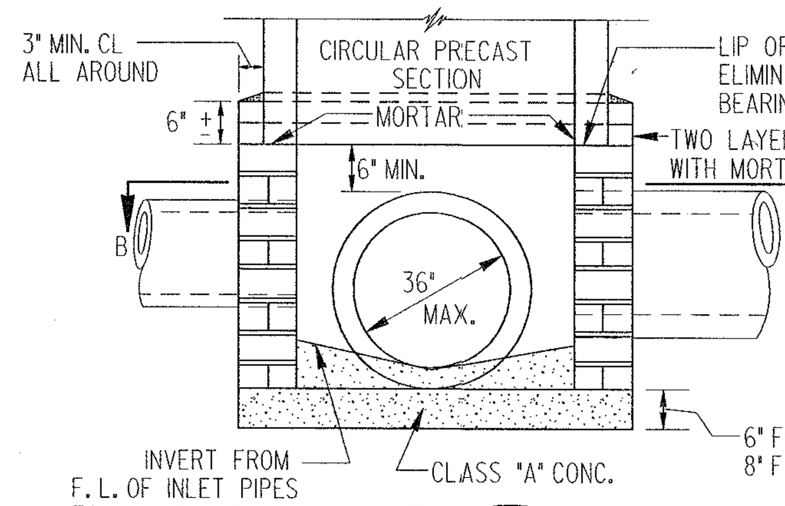

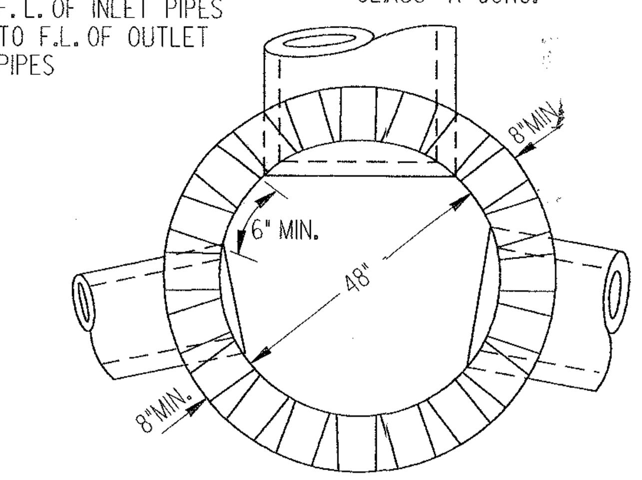

SECTION B-B

PIPE SIZE	MIN. θ1
12"	2'-3"
15"	2'-6"
18"	2'-9"
24"	3'-6"
30"	4'-0"
36"	4'-6"
42"	5'-3"
48"	5'-9"

CATCH BASIN WITH CIRCULAR SECTIONS

CONSTRUCTION ABOVE ADAPTER WILL BE EITHER PRECAST, BUILT-IN-PLACE, OR A COMBINATION OF BOTH ACCORDING TO APPLICABLE CATCH BASIN STANDARDS.

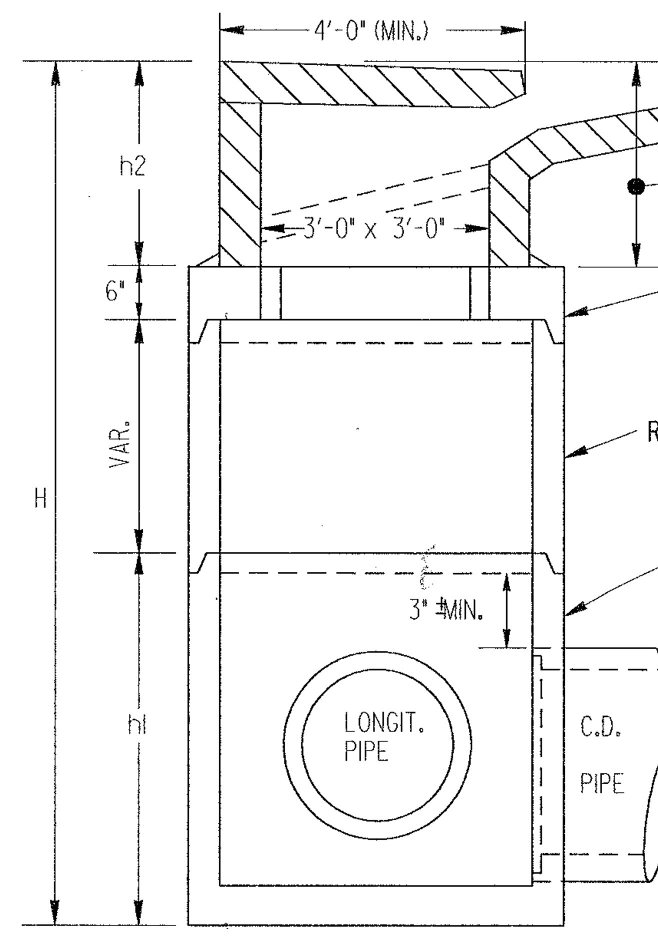

SECTIONAL VIEW

⊛ STD. NO	CURB HEIGHT	MIN. θ2	"E"
1033 D; 1033 G	6"	2'-0"	2'-0"
	8"	2'-2"	2'-0"
1033 E	4"	2'-0"	3'-0"
1033 F	4"	1'-11"	4'-0"
	6"	2'-1"	4'-0"
	8"	2'-1"	3'-0"
	10"	2'-1"	2'-0"
1034 D; 1034 G	6"	2'-1"	2'-0"
	8"	2'-2"	2'-0"
1034 E	4"	2'-0"	3'-0"
1034 F	4"	1'-11"	4'-0"
	6"	2'-1"	4'-0"
	8"	2'-1"	3'-0"
	10"	2'-1"	2'-0"

⊛REFERENCED STANDARD MAY BE PRECAST OR BUILT - IN PLACE

DATE	DEPARTMENT OF TRANSPORTATION STATE OF GEORGIA
REVISION	STANDARD CIRCULAR BASE UNITS AND RISERS FOR CATCH BASINS AND DROP INLETS (CONSTRUCTION ALTERNATES)
	NO SCALE — REV. & REDR.: NOV., 1999
BY	DES. ___ DRW. ___ TRA. ___ CHK. ___ (SUBMITTED) STATE ROAD & AIRPORT DESIGN ENGR. (APPROVED) CHIEF ENGINEER — NUMBER 1040

5/23/00 2:30:49 PM \\GDOT-DSN1\GOPLOT\QCF\qo_8855_mylar.qcf darbvd M:\David\working\1040.prf GO-RD6