STATE	PROJECT NUMBER	SHEET NO.	TOTAL SHEETS
GA.		764	995

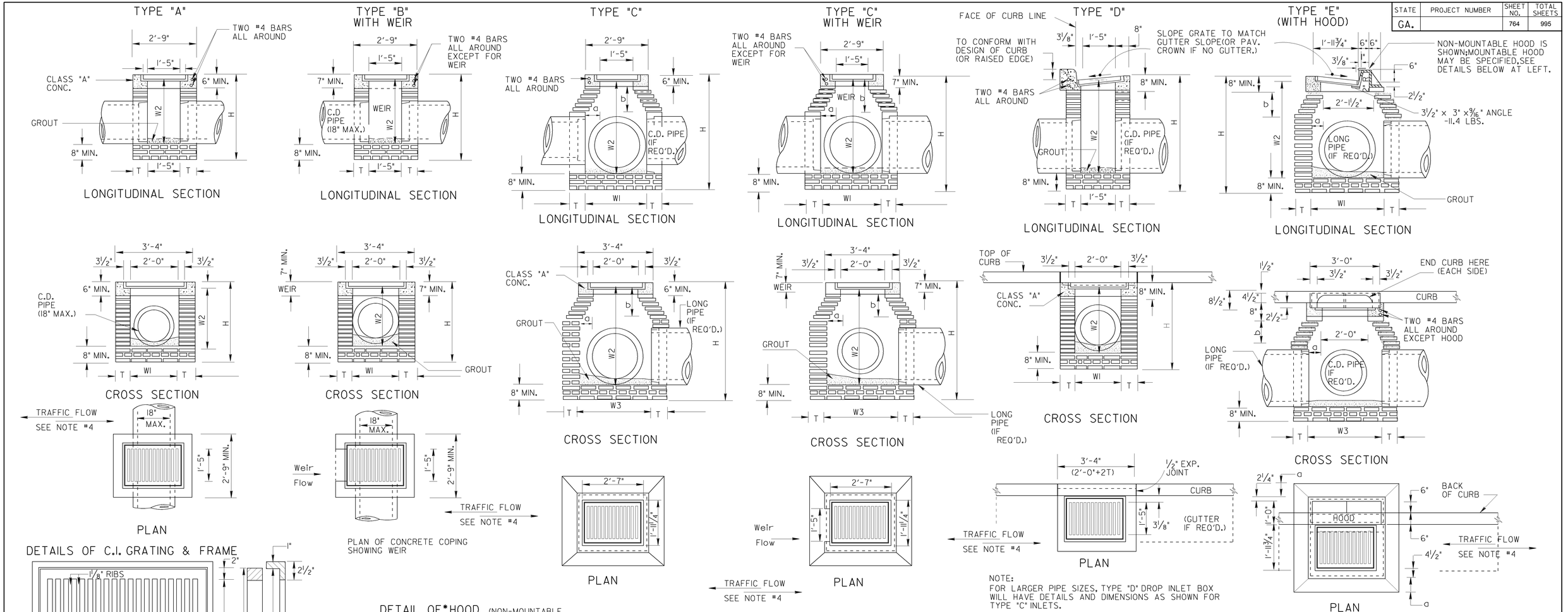

NOTE:
MINIMUM DIMENSIONS GIVEN IN TABLE BELOW ARE BASED UPON TYPICAL OUTSIDE DIAMETERS OF CONCRETE PIPES WITH NORMAL COVER AND CLEARANCES, THESE DIMENSIONS MAY BE MODIFIED IF SO DETAILED IN THE PLANS OR AS DIRECTED BY THE ENGINEER, DIMENSIONS GIVEN ARE MINIMUM EXCEPT FOR 'a' WHICH IS MAXIMUM.

* CONTRACTOR SHALL SPECIFY EITHER MOUNTABLE OR NON-MOUNTABLE TO FOUNDRY IF HOOD IS REQUIRED.

NOTE:
FOR LARGER PIPE SIZES, TYPE "D" DROP INLET BOX WILL HAVE DETAILS AND DIMENSIONS AS SHOWN FOR TYPE "C" INLETS.

SPECIAL NOTE:

STANDARD 1019A INLETS ARE FOR USE AT LOW POINTS & WHERE HYDRAULIC LOW CAPACITY GRATES ARE SUFFICIENT. WHERE HIGHER CAPACITY GRATES ARE NEEDED ON A CONTINUOUS GRADE, STANDARD 1019B IS RECOMMENDED.

NOTE:
DETAILS NOT SHOWN FOR CONSTRUCTION ALTERNATES WILL BE SIMILAR TO THAT SHOWN FOR BRICK MASONRY.

CONSTRUCTION ALTERNATES

NOTE: CONCRETE WALLS WILL BE REINFORCED WITH #4 BARS 12" O.C. BOTH WAYS, BUT WHERE H IS OVER 9 FT., AND PIPE IS OVER 30" I.D., THE HORIZONTAL STEEL, WHICH IS MORE THAN 9 FT. DEEP WILL BE INCREASED TO 6" SPACINGS. 6" CONC. BOTTOM SLABS WILL BE REINFORCED WITH #4 BARS 12" O.C. BOTH WAYS.

NOTE: FOR PRECAST ALTERNATES, SEE STD. 1019-A PRECAST AND/OR STD. 1040 PRECAST AND BUILT-IN-PLACE COMPONENTS MAY BE USED IN COMBINATIONS WHICH PROVIDE PROPER FITS AND STRUCTURAL ADEQUACY.

GENERAL NOTES:

1. SPECIFICATIONS:GEORGIA STANDARD AND CURRENT EDITION, AND SUPPLEMENTS THERETO.
2. ½" EXPANSION JOINT WILL BE REQUIRED WHERE RIGID PAVEMENT, CONCRETE SIDEWALK OR CONCRETE GUTTER MEETS DROP INLETS.
3. ALIGNMENT, NUMBER AND SIZES OF PIPES SHOWN ARE ONLY TYPICAL, SEE PLANS FOR ACTUAL PIPE CULVERT REQUIREMENTS.
4. ALL TYPE DROP INLETS WILL BE CONSTRUCTED (AS SHOWN), SO THAT THE GRATE BARS ARE PERPENDICULAR TO THE FLOW OF TRAFFIC EXCEPT ON LIMITED ACCESS PROJECTS OR WHERE BICYCLES ARE PROHIBITED.
5. BRICK MASONRY WITH CLASS "A" CONC. TOP PORTION IS SHOWN AS STANDARD CONSTRUCTION WITH ALTERNATES PERMITTED AS SHOWN, BOTTOM SLAB MAY BE 8" MIN. NON-REINFORCED CONCRETE, 8" BRICK OR 6" MIN. REINFORCED CONCRETE, SEE APPLICABLE STANDARDS FOR ALTERNATE PRECAST CONSTRUCTION.

TABLE OF MINIMUM DIMENSIONS FOR DROP INLETS

D	TYPES "A" or "B" BRICK OR REINF. CONC.			TYPE "C" OR "D" (BRICK)						TYPE "E" (BRICK)						TYPE "C", "D" OR "E" (REINFORCED CONCRETE)						
	W1	W2	H(min)	W1	W2	W3	a (MAX.)	b	H(min.)	W1	W2	W3	a (MAX.)	b	H(min.)	W1 type "C"	W1 type "E"	W2	W3	a (MAX.)	b	H(min.)
15"	2'-0"	2'-7"	3'-3½"	2'-2⅛"	2'-11"	2'-9⅛"	0'-4 9/16"	0'-7⅞"	3'-9½"	3'-2⅛"	3'-1"	3'-0⅝"	0'-7 3/16"	1'-1⅛"	3'-11½"	2'-0"	2'-1"	2'-7"	2'-0"	3½"	6"	3'-6"
18"	2'-0"	2'-10"	3'-7"	2'-2⅛"	3'-2½"	2'-9⅛"	0'-4 9/16"	0'-7⅞"	4'-1"	3'-2⅛"	3'-4½"	3'-0⅝"	0'-7 3/16"	1'-1⅛"	4'-1"	2'-0"	2'-1"	3'-0"	2'-0"	3½"	6"	3'-11"
24"	~	~	~	2'-8⅛"	3'-3⅛"	3'-3⅛"	0'-7 9/16"	1'-1⅛"	4'-9"	3'-2⅛"	3'-11½"	3'-0⅝"	0'-7 3/16"	1'-1⅛"	4'-8¼"	2'-8"	2'-9"	3'-8"	2'-6"	6½"	11¼"	4'-7"
30"	~	~	~	3'-7¼"	4'-0¼"	3'-10 11/16"	1'-0⅛"	1'-9"	5'-10"	3'-5½"	4'-8⅜"	3'-4"	0'-8"	1'-1⅞"	5'-6⅞"	3'-4"	3'-6"	4'-9"	3'-0"	9½"	16½"	5'-10"
36"	~	~	~	4'-1⅞"	6'-0⅝"	4'-8⅞"	1'-4 7/16"	2'-2¼"	6'-11⅛"	3'-11½	5'-8 9/16"	3'-10"	0'-11"	1'-7 1/16"	6'-7 1/16"	3'-10"	4'-0"	5'-10"	3'-9"	1'-2"	2'-0"	6'-10"
42"	~	~	~	4'-5"	7'-1¾"	5'-0"	1'-6"	2'-7 3/16"	8'-0¼"	4'-6½"	7'-5 11/16"	4'-5"	1'-2½"	2'-1 3/16"	8'-4 3/16"	4'-5"	4'-6"	7'-0"	4'-3"	1'-5"	2'-5½"	7'-11"
48"	~	~	~	5'-0"	8'-2¾"	5'-7"	1'-9½"	3'-1¼"	9'-1¼"	5'-11½"	8'-6 11/16"	5'-0"	1'-6"	2'-7 3/16"	9'-5 3/16"	5'-0"	5'-0"	8'-2"	5'-0"	1'-9½"	3'-1½"	9'-2"
54"	~	~	~	5'-7"	9'-4"	6'-2"	2'-1"	3'-7½"	10'-2½"	5'-8½"	9'-7¾"	5'-7"	1'-9½"	3'-1¼"	10'-6¼"	5'-6"	5'-6"	9'-2"	5'-6"	2'-0½"	3'-6½"	10'-0"
60"	~	~	~	6'-2"	1'-4⅞"	6'-9"	2'-4½"	4'-1⅜"	11'-3¼"	6'-3½"	10'-8 13/16"	6'-2"	2'-1"	3'-7 5/16"	1'-7 5/16"	6'-0"	6'-0"	10'-3"	6'-0"	2'-3½"	4'-0"	11'-1"

DATE	DEPARTMENT OF TRANSPORTATION STATE OF GEORGIA
REVISION	STANDARD DROP INLETS (BUILT-IN-PLACE)
	SCALE AS SHOWN — REV. & REDR. AUG., 1999
BY	DES. ____ (SUBMITTED) STATE ROAD & AIRPORT DESIGN ENGR. REV. ____ TRA. ____ (APPROVED) CHIEF ENGINEER CHK. ____
	NUMBER 1019A