STATE	COUNTY	PROJECT NUMBER	SHEET NO.	TOTAL SHEETS
GA.			761	995

DROP CABLE SPLICE DETAIL FOR LOCAL CONTROLLER WITH STAR MODEM

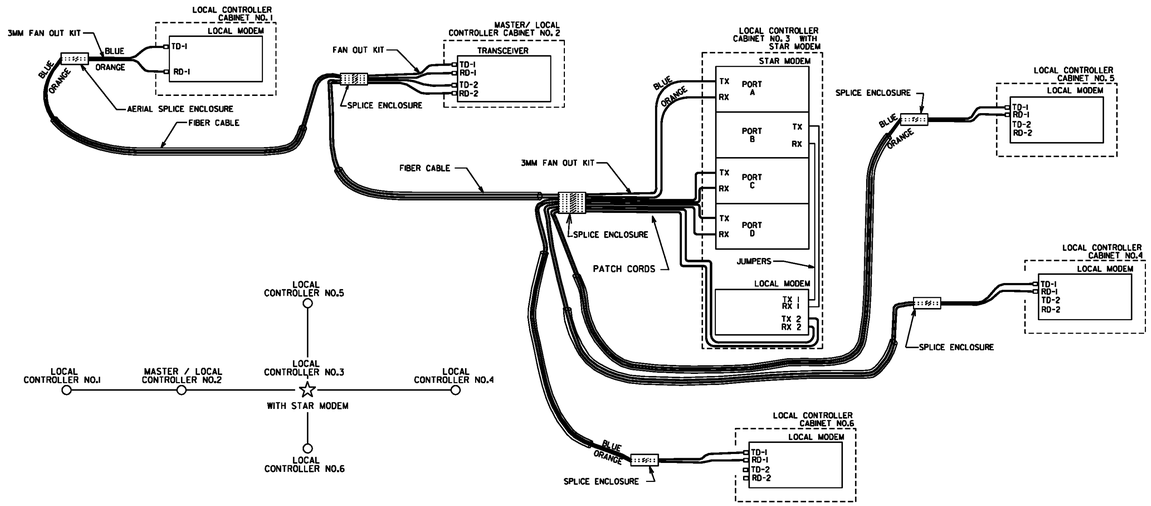

FIBER OPTIC DISTRIBUTION DETAIL (CLOSED LOOP SYSTEM ONLY)

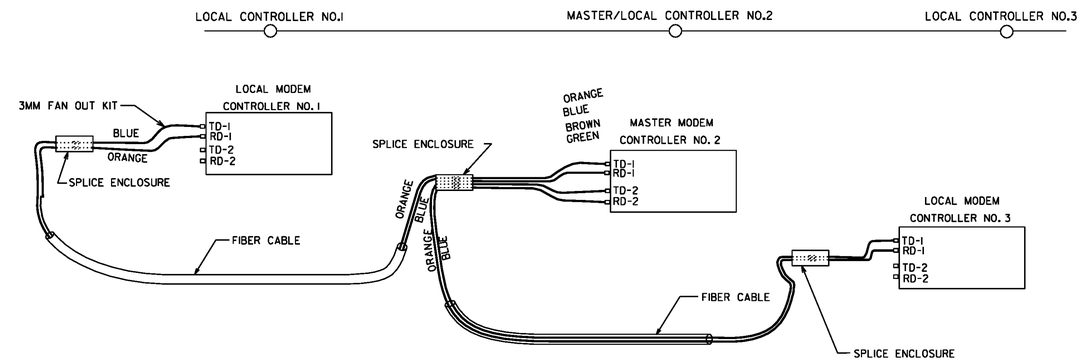

DROP CABLE SPLICE DETAIL FOR MASTER / LOCAL CONTROLLER WITH STAR MODEM

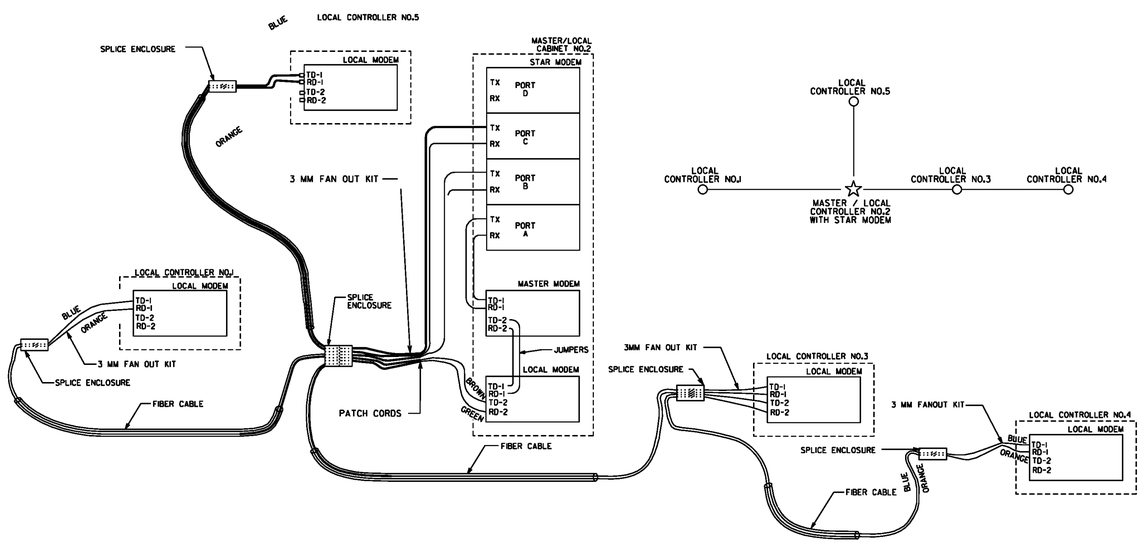

DATE	DEPARTMENT OF TRANSPORTATION STATE OF GEORGIA	
REVISION DESCRIPTION	TRAFFIC SIGNAL DETAIL *FIBER OPTICS DETAILS* *2 OF 2*	
REV. BY:	*APRIL 2010* NOT TO SCALE - REPORT ERRORS	DETAIL NUMBER *TS-11*