STATE	COUNTY	PROJECT NUMBER	SHEET NO.	TOTAL SHEETS
GA.			752	995

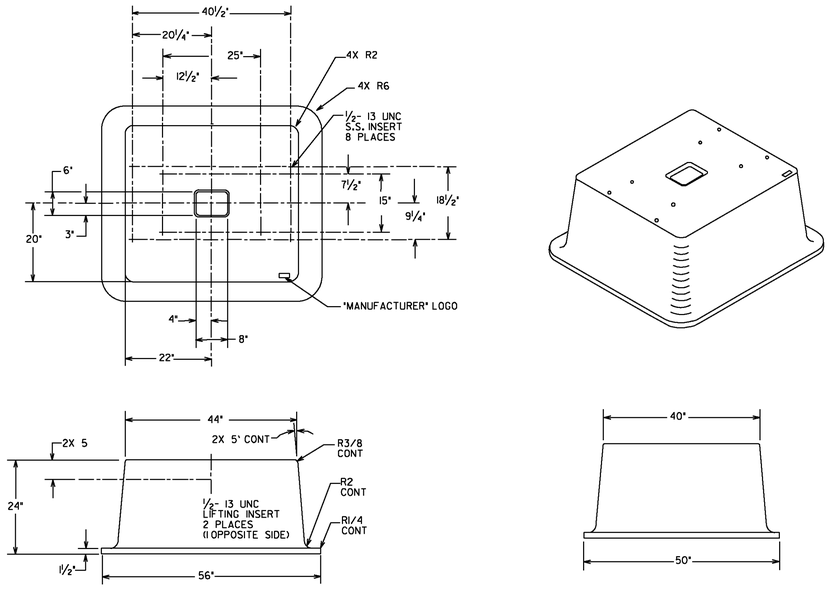

PREFABRICATED 332 CONTROLLER BASE

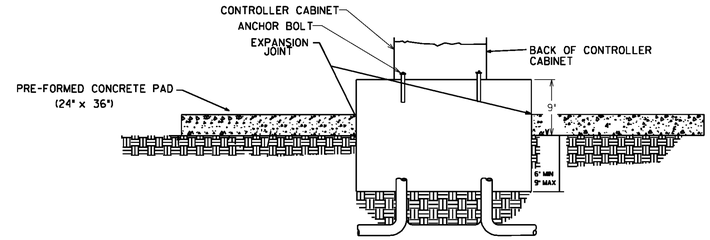

SECTION A-A

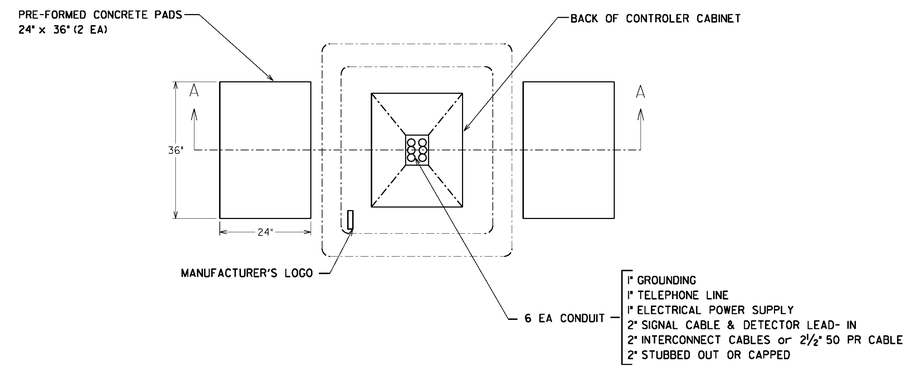

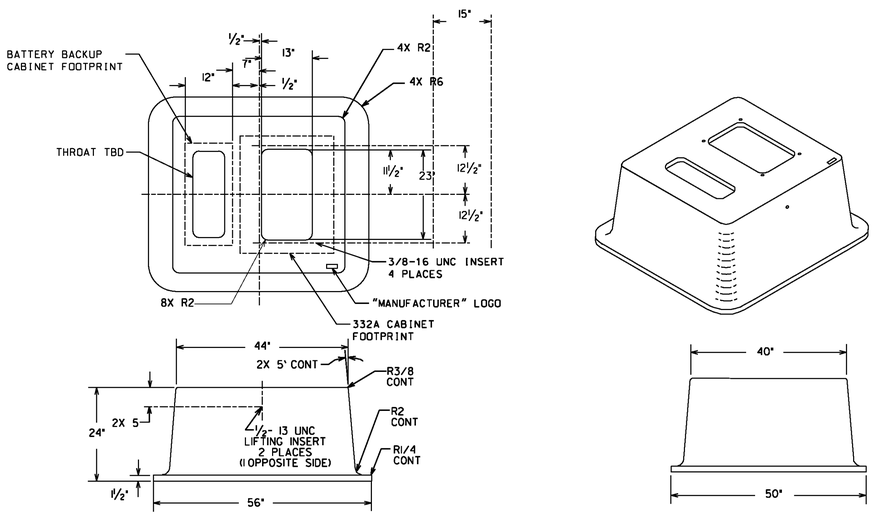

PREFABRICATED CONTROLLER BASE
WITH BATTERY BACKUP BASE MOUNT EXTENSION

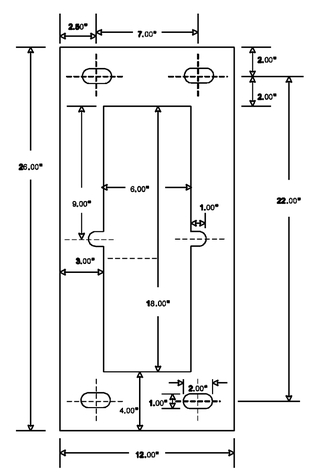

BATTERY BACKUP BASE MOUNT
CABINET ANCHOR BOLT PATTERN

NOTE: MODEL 332 CONTROLLER CABINETS
WITH BATTERY BACKUPS REQUIRES THREE PADS

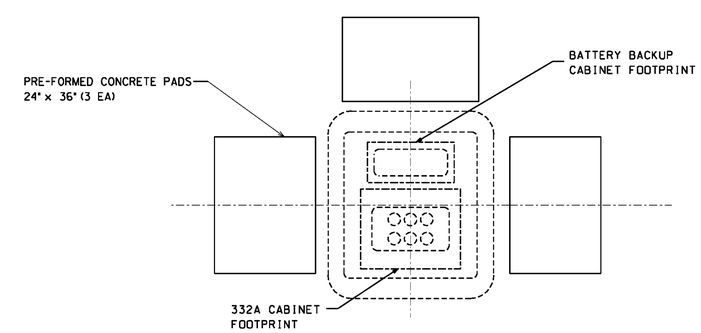

Guidelines For Usage On Metric Projects

When these details are incorporated into plans and or projects that are being prepared or constructed in metric units, exact or precise conversion to metric units is not required. The dimensions shown that are in feet and inches may be converted to corresponding metric units using the following "Rounded-Off" conversion factors: 1" =25mm, 4"=100mm, and 12" or 1' =300mm. All measurement notes that refer to linear feet and square yards shall be interpreted to mean linear meters and square meters.

REV. BY:	REVISION DESCRIPTION	DATE

DEPARTMENT OF TRANSPORTATION
STATE OF GEORGIA

TRAFFIC SIGNAL DETAIL

CABINET BASE DETAIL

APRIL 2010

NOT TO SCALE • REPORT ERRORS

DETAIL NUMBER
TS-03