6/18/2009 1:38:27 PM \\GDOT-DSNI\GOPLOT\QCF\go_tiff_output.qcf gowens V:\GARY\REVISED S-7\S-7.prf GO-RD6

STATE	PROJECT NUMBER	SHEET NO.	TOTAL SHEETS
GA.		714	995

BENCHING DETAIL

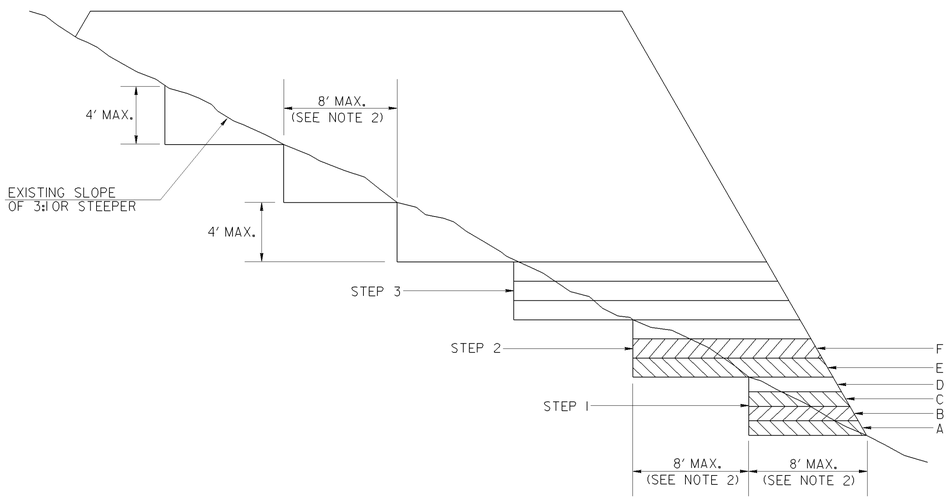

NOTES :

1. WHERE THE EMBANKMENT IS TO BE PLACED ON A HILLSIDE OR ANOTHER EXISTING EMBANKMENT HAVING A SLOPE OF 3 TO 1 OR STEEPER, THE FOUNDATION MUST BE BENCHED WHILE THE EMBANKMENT IS BEING MADE.(SEE DIAGRAM ABOVE)

2. THE DIAGRAM SHOWS THAT BEFORE LAYER "A" IS PLACED THE FIRST STEP (1) IS CUT INTO THE SLOPE A MAXIMUM DISTANCE OF ABOUT 8 FEET (ABOUT ¾ THE WIDTH OF THE TYPICIAL D-8 BULLDOZER BLADE). SUCCESSIVE LAYERS B, C, AND D ARE THEN PLACED BEFORE LAYER "E" IS PLACED, THE SECOND STEP IS CUT 8 FEET INTO THE SLOPE AND SUCCESSIVE LAYERS ARE AGAIN PLACED. IF IT IS ANTICIPATED THAT THE VERTICAL PART OF THE STEP WILL EXCEED 4 FEET IF A 8 FEET HORIZONTAL CUT IS MADE, THEN THE ACTUAL CUT STOPS WHEN THE VERTICAL PART REACHES A MAXIMUM OF 4 FEET ALLOWING THE HORIZONTAL DISTANCE TO VARY.

3. THE PROCESS OF BENCHING IS CONSIDERED INCIDENTAL TO THE ITEM OF UNCLASSIFIED EXCAVATION AND BORROW OR GRADING COMPLETE IN CONSTRUCTION OF THE EMBANKMENT AND NO ADDITIONAL MEASUREMENT OF QUANTITY OR PAYMENT WILL BE MADE FOR BENCHING.

SERRATED SLOPE DETAIL

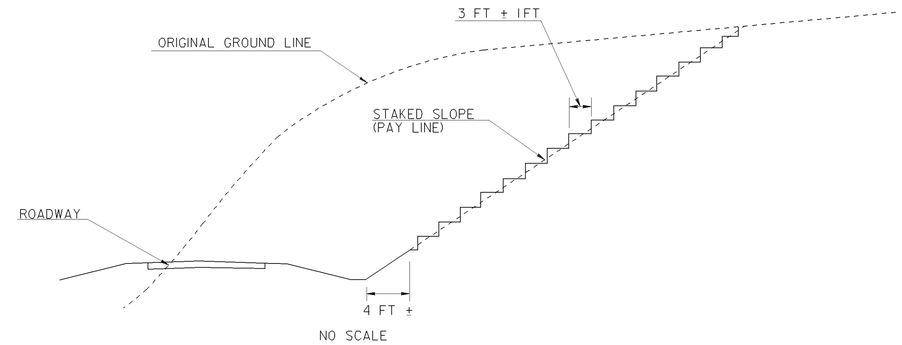

NOTES :

1. SLOPES STEEPER THAN 3:1 SHALL BE SERRATED.

2. WIDTH OF STEP SHALL BE 3 FT \ 1FT.

3. HEIGHT OF STEP IS A FUNCTION OF WIDTH AND STAKED SLOPE.

4. TREAD OF STEP SHALL BE APPROXIMATELY HORIZONTAL.

5. SERRATED SLOPES SHALL BE USED ON ALL PROJECTS IN DISTRICTS 1, 6, AND 7, EXCEPT WHERE SPECIFICALLY EXCEPTED BY THE GEO-TECHNICAL BUREAU IN THE SOIL SURVEY REPORT. SERRATED SLOPES SHALL NOT BE USED IN DISTRICTS 2, 3, 4, AND 5, UNLESS REQUIRED BY THE SOIL SURVEY.

G.L.O.	REVISED BENCHING DETAIL & TITLE BLOCK.	6-18-09
R.M.U.	GEN. REVISION	1-28-82
BY	REVISION	DATE

DEPARTMENT OF TRANSPORTATION
STATE OF GEORGIA

CONSTRUCTION DETAIL

SERRATED SLOPE DETAIL
BENCHING DETAIL

NO SCALE

JULY, 1981

NUMBER
S-7

6/18/2009 1:38:27 PM \\GDOT-DSNI\GOPLOT\QCF\go_tiff_output.qcf gowens V:\GARY\REVISED S-7\S-7.prf