STATE	PROJECT NUMBER	SHEET NO.	TOTAL SHEETS
GA.	711		995

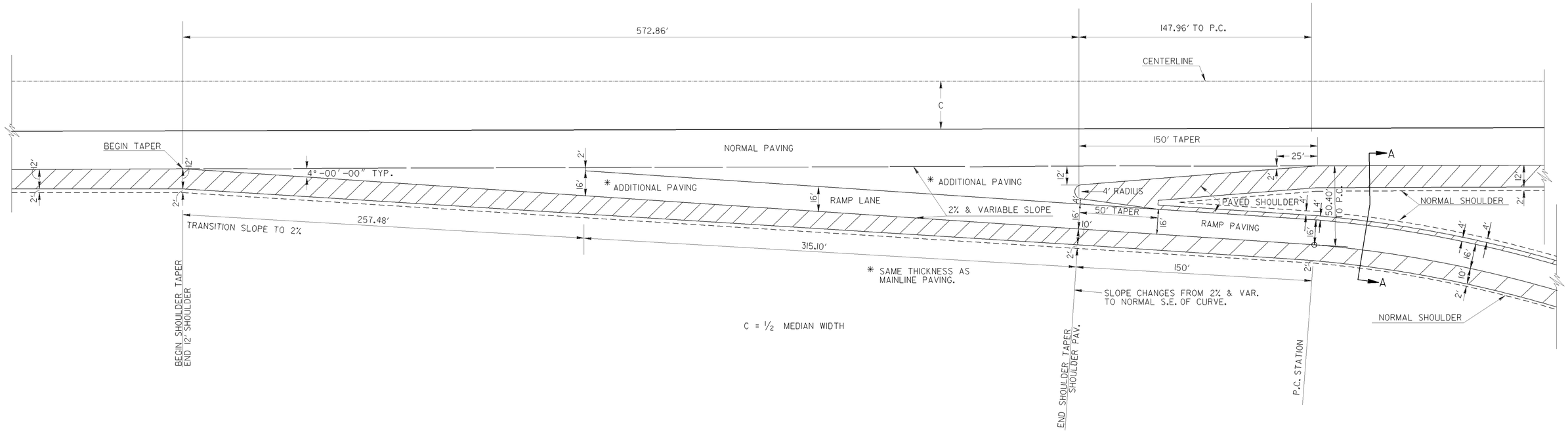

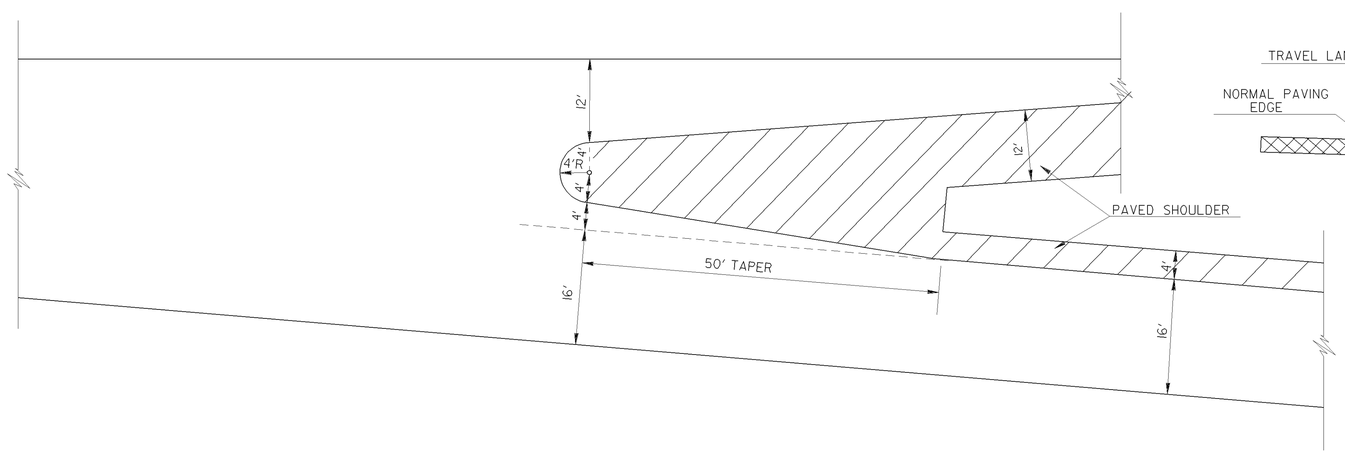

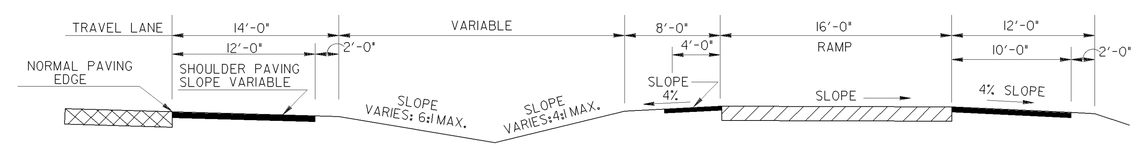

SECTION A-A

DATE	REVISION	BY

DEPARTMENT OF TRANSPORTATION
STATE OF GEORGIA

CONSTRUCTION DETAIL

DETAIL OF EXIT RAMPS FOR INTERCHANGES

NO SCALE

REDRAWN APRIL 2011

NUMBER
R-2