| STATE | PROJECT NUMBER | SHEET NO. | TOTAL SHEETS |
|---|---|---|---|
| GA. | | 703 | 995 |

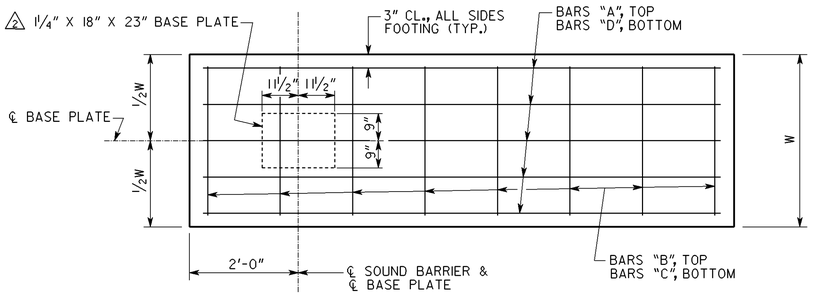


PLAN

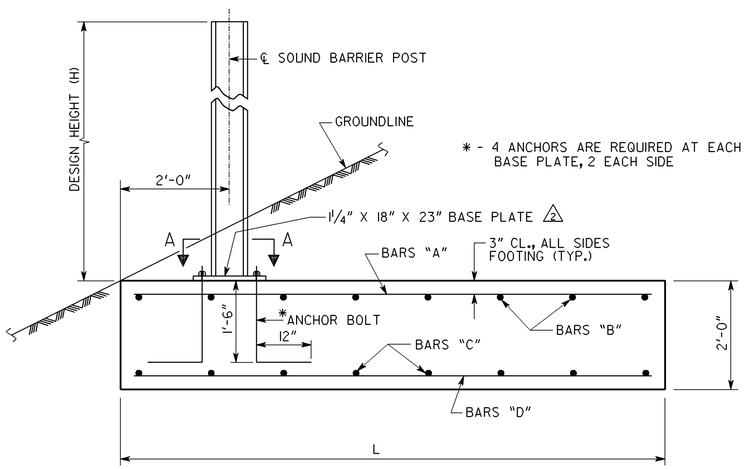


* - 4 ANCHORS ARE REQUIRED AT EACH BASE PLATE, 2 EACH SIDE

ELEVATION

## NOTES

1. SPREAD FOOTING ALTERNATE SHALL BE USED ONLY WHEN THE DRILLED SHAFT FOUNDATION IS NOT FEASIBLE DUE TO SHALLOW ROCK.
2. SPREAD FOOTINGS ARE DESIGNED FOR AN ALLOWABLE SOIL BEARING CAPACITY OF 1.5 TONS PER SQ. FT.
3. ANCHOR BOLTS SHALL BE A-449 WITH WASHERS AND HEX NUTS.
4. ALL NUTS, BOLTS, WASHERS, PLATES AND HARDWARE REQUIRED FOR CONSTRUCTING SOUND BARRIERS SHALL BE HOT DIP GALVANIZED IN ACCORDANCE WITH ASTM-153. THREADS FOR NUTS SHALL BE UNC CLASS 2B, THREADS FOR BOLTS AND THREADED RODS SHALL BE UNC CLASS 2A. WASHERS SHALL BE COMPATIBLE WITH NUTS AND BOLTS.
5. COST FOR CONCRETE, REINFORCING, EXCAVATION, BACKFILL, ANCHOR BOLTS AND OTHER MATERIALS NECESSARY FOR INSTALLATION SHALL BE INCLUDED IN PRICE BID FOR SOUND BARRIER WALL.
6. THE POST SIZE SHALL BE AS SHOWN ON THE POST SUMMARY TABLE ON THE STANDARD SOUND BARRIER FOUNDATION AND POST DETAIL SHEET. THE WALL MOUNTED POST SIZE SHALL BE USED.
7. DESIGN DATA: CONCRETE ---------- CLASS A, $f'_c$ = 3000 PSI
   REINFORCEMENT STEEL ----- GRADE 60, $f_y$ = 60000 PSI
8. △1 MAXIMUM POST SPACING ALLOWED IS 10 FEET.

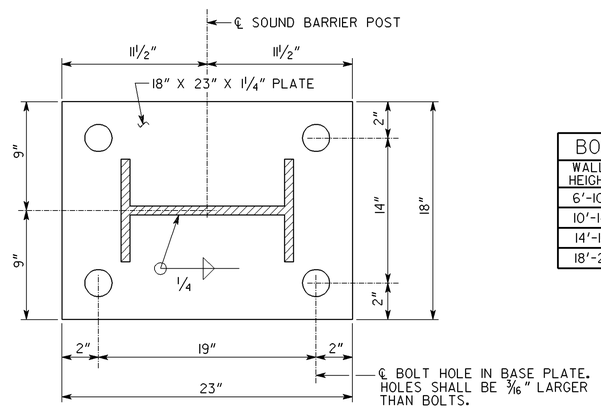


△2 SECTION A-A
NO SCALE

| BOLT SIZE | |
|---|---|
| WALL HEIGHT | BOLT DIAMETER |
| 6'-10' | ¾" |
| 10'-14' | 1" |
| 14'-18' | 1¼" |
| 18'-24' | 1½" |

** - FOR INFORMATION ONLY

| TABLE OF LETTERED BARS AND DIMENSIONS | | | | | | | | | | | ** QUANTITIES | |
|---|---|---|---|---|---|---|---|---|---|---|---|---|
| DESIGN HEIGHT (H) | L | W | BARS "A" | | BARS "B" | | BARS "C" | | BARS "D" | | CONCRETE (CU. YDS.) | REINF. STEEL (LBS.) |
| | | | NO. REQ'D. | BAR SIZE | NO. REQ'D. | BAR SIZE | NO. REQ'D. | BAR SIZE | NO. REQ'D. | BAR SIZE | | |
| 10' | 7'-6" | 3'-2" | 4 | #6 | 7 | #4 | 7 | #4 | 4 | #6 | 1.8 | 113 |
| 12' | 8'-0" | 3'-2" | 4 | #6 | 7 | #4 | 7 | #4 | 4 | #6 | 1.9 | 119 |
| 14' | 9'-0" | 3'-2" | 4 | #6 | 7 | #4 | 7 | #4 | 4 | #6 | 2.1 | 131 |
| 16' | 10'-0" | 3'-2" | 5 | #6 | 8 | #4 | 8 | #4 | 5 | #6 | 2.4 | 175 |
| 18' | 10'-9" | 3'-2" | 6 | #6 | 8 | #4 | 8 | #4 | 6 | #6 | 2.5 | 218 |
| 20' | 11'-0" | 3'-8" | 8 | #6 | 8 | #4 | 8 | #4 | 8 | #6 | 3.0 | 292 |
| 22' | 12'-0" | 3'-8" | 4 | #8 | 9 | #4 | 9 | #4 | 4 | #8 | 3.3 | 289 |
| 24' | 12'-9" | 3'-8" | 4 | #8 | 9 | #4 | 9 | #4 | 4 | #8 | 3.5 | 342 |

| REVISION | DATE | BY |
|---|---|---|
| REVISED PLATE DIMENSIONS | 3-23-09 | SWW |
| ADDED MAX. SPACING NOTE | 5-27-04 | SWW |

DEPARTMENT OF TRANSPORTATION
STATE OF GEORGIA

CONSTRUCTION DETAIL

SPREAD FOOTING ALTERNATE FOR SOUND BARRIER WALL

SCALE ¾"=1'-0"(UNLESS NOTED)

DESIGNED JPT/SWW
DRAWN WMC
CHECKED SWW
DESIGN GROUP SWW
REVIEWED JPT/MCD
APPROVED PVL

NUMBER
N-3