STATE	PROJECT NUMBER	SHEET NO.	TOTAL SHEETS
GA.		702	995

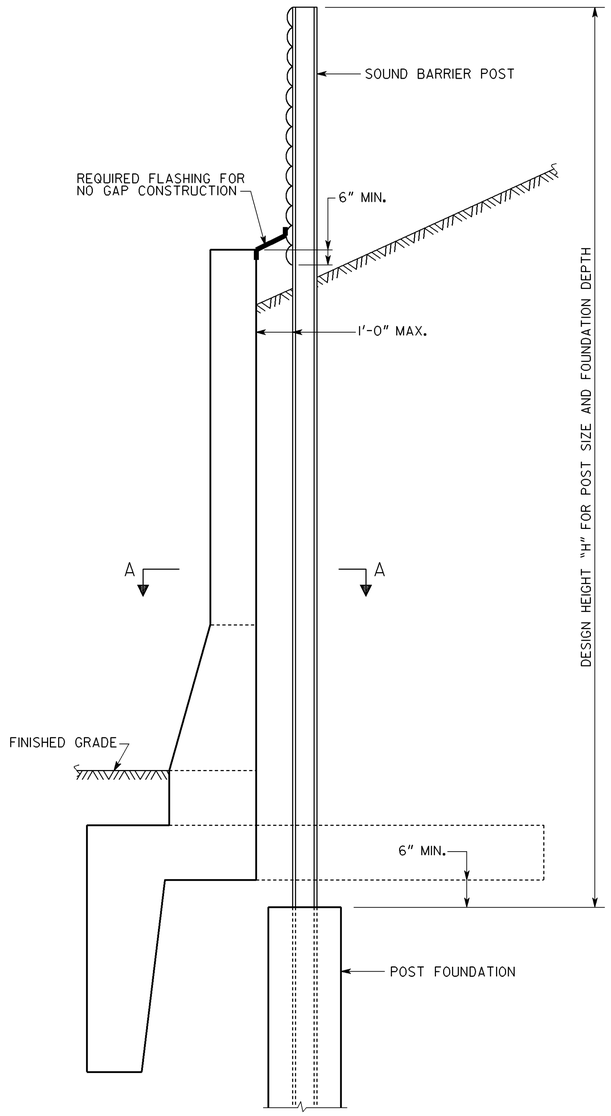

DETAIL FOR GROUND MOUNTED SOUND BARRIER

(FOR USE WITH TYPE 6, 6A, 6SA, 6B, 6SB, 6C OR 6SC CONCRETE SIDE BARRIER)

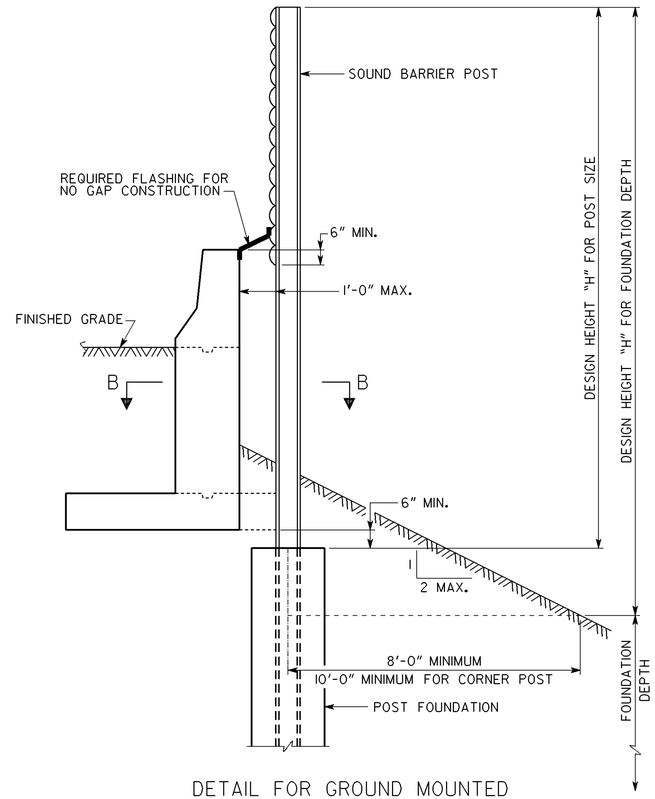

DETAIL FOR GROUND MOUNTED SOUND BARRIER

(FOR USE WITH TYPE 2, 2A, 2B OR 2C CONCRETE SIDE BARRIER)

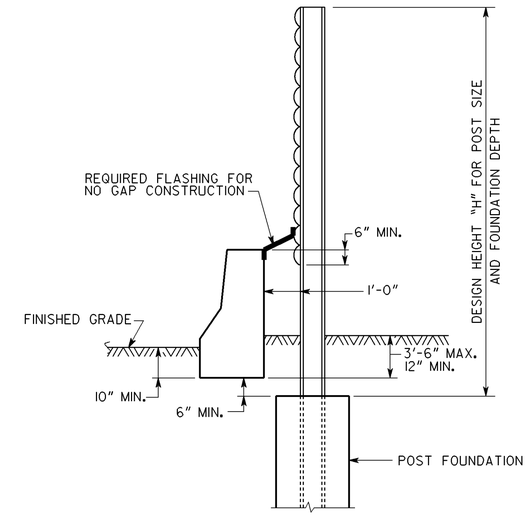

DETAIL FOR GROUND MOUNTED SOUND BARRIER

(FOR USE WITH TYPE 7R CONCRETE SIDE BARRIER)

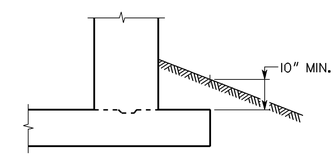

FOOTING DETAIL FOR SIDE BARRIER

(FOR USE WITH TYPE 2, 2A, 2B OR 2C CONCRETE SIDE BARRIER)

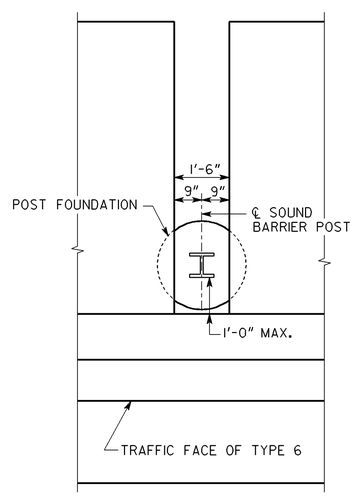

SECTION A-A

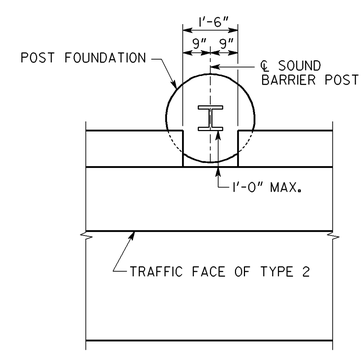

SECTION B-B

NOTE:
CONSTRUCTION OR EXPANSION JOINTS IN THE TYPE 2 AND TYPE 6 BARRIER SHALL BE LOCATED A MINIMUM OF 3'-0" FROM A BLOCK-OUT.

NOTE: TYPE 2 AND TYPE 7R BARRIER SHOWN. DETAILS ALSO APPLY TO BARRIER TYPE 2S AND 7RS.

DATE	DEPARTMENT OF TRANSPORTATION STATE OF GEORGIA	
REVISION	CONSTRUCTION DETAIL SOUND BARRIER DETAILS AT CONCRETE SIDE BARRIERS	
	SCALE 1/2"=1'-0"(UNLESS NOTED)	MAY, 2004
BY	DESIGNED JPT/DLC DRAWN WMC CHECKED SWW DESIGN GROUP SWW	REVIEWED JPT/MCD APPROVED PVL
		NUMBER N-2