STATE	PROJECT NUMBER	SHEET NO.	TOTAL SHEETS
GA.		701	995

POST SIZE	GAGE FOR BOLTS
W8X24	3 1/2"
W8X31	5 1/2"
W10X33	5 1/2"
W10X39	5 1/2"
W12X40	5 1/2"
W12X45	5 1/2"

2 CAST-IN-PLACE		
DESIGN HEIGHT "H" 1	ANCHOR DIAMETER D" 5	BOLT HOLE SIZE
6'	3/8"	9/16"
8'	1/2"	11/16"
10'	5/8"	13/16"
12'	3/4"	15/16"
14'	7/8"	1 1/16"
16'	1"	1 3/16"
18'	1 1/8"	1 5/16"
18'-26'	1 1/2" W/PLATE	1 11/16"

NOTES: SOUND BARRIER SHALL NOT BE MOUNTED ON SIDE BARRIERS AS SHOWN IN GA STD 4948.

SOUND BARRIER SHALL ONLY BE ATTACHED TO BARRIERS OR RETAINING WALLS THAT HAVE BEEN SPECIFICALLY DESIGNED FOR THE LOADING FROM SOUND BARRIER.

6

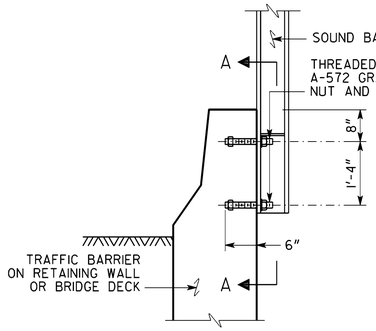

ANCHOR DETAIL FOR SOUND BARRIER BETWEEN 6'-0" AND 18'-0"

CAST-IN-PLACE

6 2

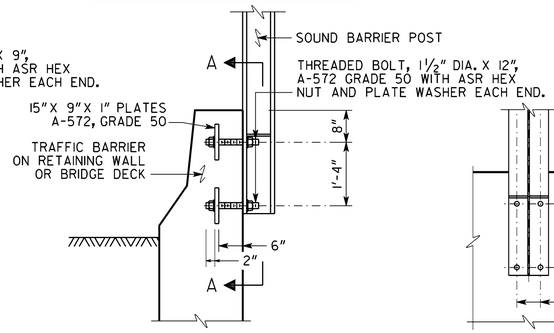

ANCHOR DETAIL FOR SOUND BARRIER BETWEEN 18'-0" AND 26'-0"

CAST-IN-PLACE

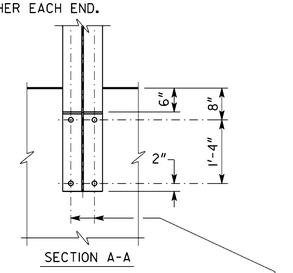

3

POST SIZE	PANEL SUPPORT PLATE SIZE *
W8X24,31	4" X 7 1/8" X 1/2"
W10X22	4" X 9 3/8" X 1/2"
W10X26	4" X 9 1/2" X 1/2"
W10X33,39	4" X 8 7/8" X 1/2"
W12X26	4" X 11 1/2" X 1/2"
W12X40	4" X 11" X 1/2"
W12X45	4" X 10 7/8" X 1/2"
W14X30,34,38	4" X 13 1/8" X 1/2"
W14X43	4" X 12 5/8" X 1/2"
W14X48,53	4" X 12 1/2" X 1/2"
W14X61	4 7/8" X 12 5/8" X 1/2"
W14X74,82	4 7/8" X 12 1/2" X 1/2"
W14X90,109	7" X 12 5/8" X 1/2"

* REQUIRED FOR BARRIER MOUNTED SOUND BARRIER ONLY. OPTIONAL FOR GROUND MOUNTED SOUND BARRIER.

NOTE: MAXIMUM HEIGHT ON BRIDGE = 12'-0"
MAXIMUM HEIGHT ON M.S.E. WALL = 18'-0"

DETAILS FOR BARRIER MOUNTED SOUND BARRIER

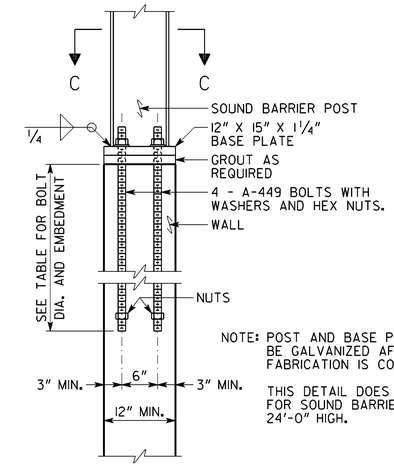

NOTE: POST AND BASE PLATE SHALL BE GALVANIZED AFTER ALL FABRICATION IS COMPLETE.

THIS DETAIL DOES NOT APPLY FOR SOUND BARRIERS OVER 24'-0" HIGH.

DETAILS FOR WALL MOUNTED SOUND BARRIER

10 FOOT POST SPACING

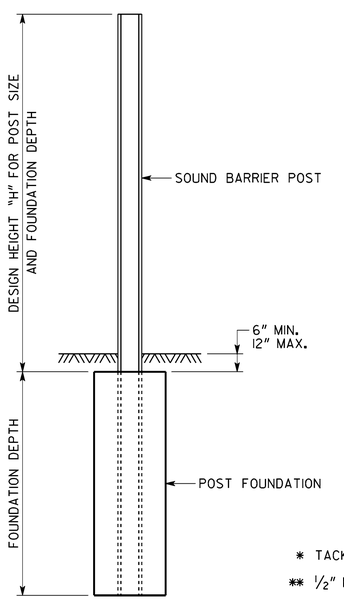

GROUND MOUNTED SOUND BARRIER

SCALE: 3/8" = 1'-0"

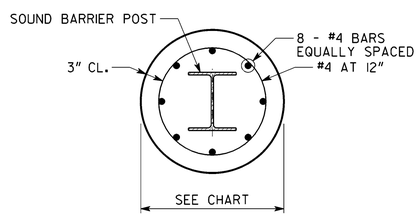

SECTION B - B

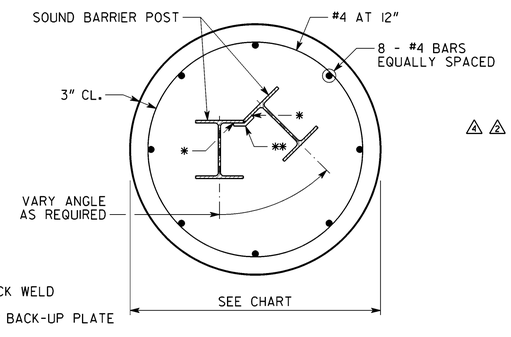

CORNER POST BASE DETAIL

DETAILS FOR GROUND MOUNTED SOUND BARRIER

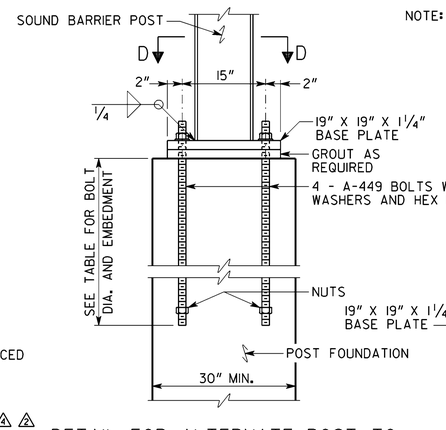

4 2

DETAIL FOR ALTERNATE POST TO FOUNDATION CONNECTION DETAIL

10, 15 AND 20 FOOT POST SPACING

NOTE: POST AND BASE PLATE SHALL BE GALVANIZED AFTER ALL FABRICATION IS COMPLETE.

THIS DETAIL DOES NOT APPLY FOR SOUND BARRIERS OVER 24'-0" HIGH.

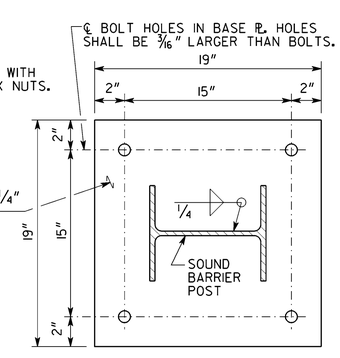

4 2 SECTION D-D

SCALE: 2" = 1'-0"

2 POST BOLTED TO DRILLED SHAFT		
HEIGHT	BOLT Ø	EMBED
6' TO 12'	3/4"	2'-0"
12' TO 16'	1"	3'-0"
16' TO 20'	1 1/4"	4'-6'
20' TO 24'	1 1/2"	6'-0"

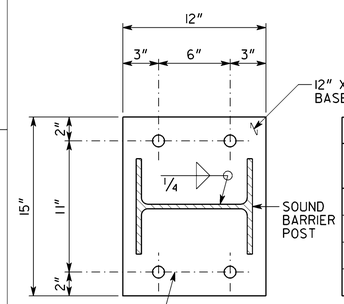

BOLT SIZE		
DESIGN HEIGHT "H"	BOLT DIAMETER	EMBEDMENT
6' TO 10'	3/4"	2'-0"
10' TO 14'	1"	2'-6"
14' TO 18'	1 1/4"	3'-6"
18' TO 24'	1 1/2"	4'-6"

SECTION C - C

SCALE: 2" = 1'-0"

NOTE: SOUND BARRIERS SHALL ONLY BE ATTACHED TO BARRIERS OR RETAINING WALLS WHICH HAVE BEEN SPECIFICALLY DESIGNED FOR THE LOADING FROM THE SOUND BARRIER.

DETAILS FOR WALL MOUNTED SOUND BARRIER

10 FOOT POST SPACING

BY	REVISIONS	DATE
SWW	REMOVED ADHESIVE ANCHOR	01-10-12
SWW	REVISED TABLE AND DETAIL	11-16-11
SWW	REVISED PLATE DETAILS	03-23-11
SWW	REVISED PANEL SUPPORT PLATE	08-17-08
SWW	REVD. TABLES AND DETAILS	01-08-08
DLC	REVD. TABLE AND NOTE	02-24-05

DEPARTMENT OF TRANSPORTATION

STATE OF GEORGIA

CONSTRUCTION DETAIL

SOUND BARRIER FOUNDATION AND POST DETAILS

SCALE 3/8" = 1'-0" (UNLESS NOTED) MAY 2004

DESIGNED JPT/DLC
DRAWN DLC
CHECKED SWW
DESIGN GROUP SWW

REVIEWED JPT/MCD
APPROVED PVL

NUMBER N-1 B

PAGE 2 OF 2

SOUNDBARRIER.DGN