TYPE D CABINET POWER PANEL WIRING

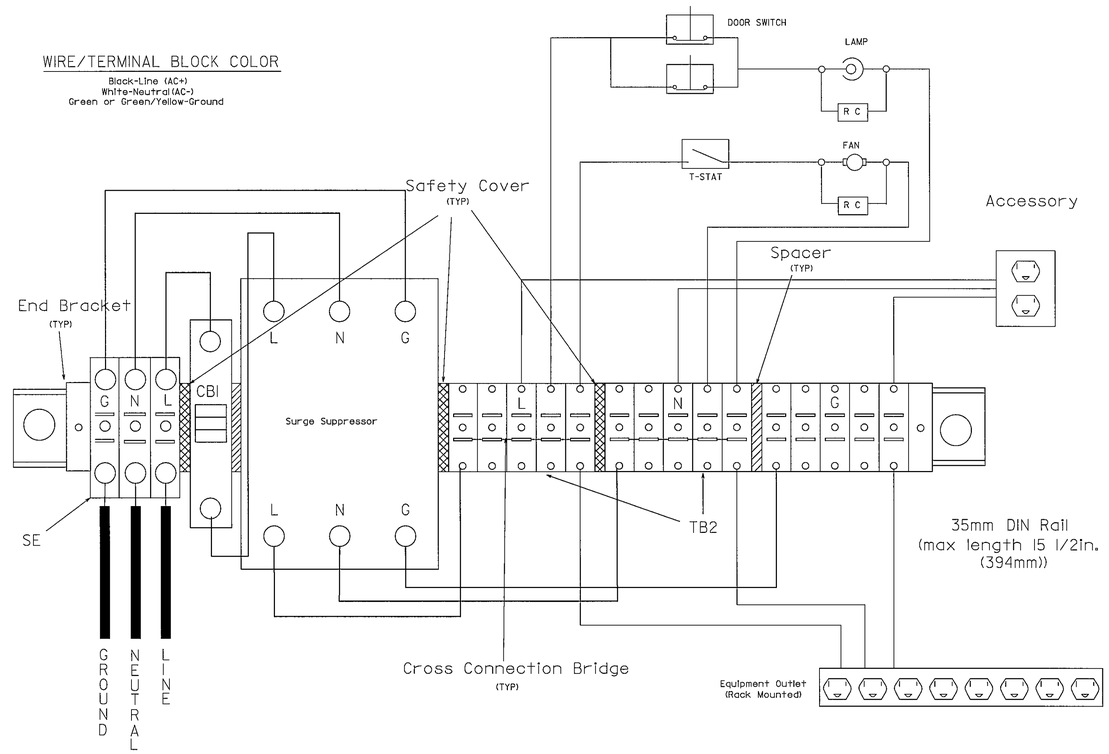

TYPE D EQUIPMENT CABINET ASSEMBLY DETAIL

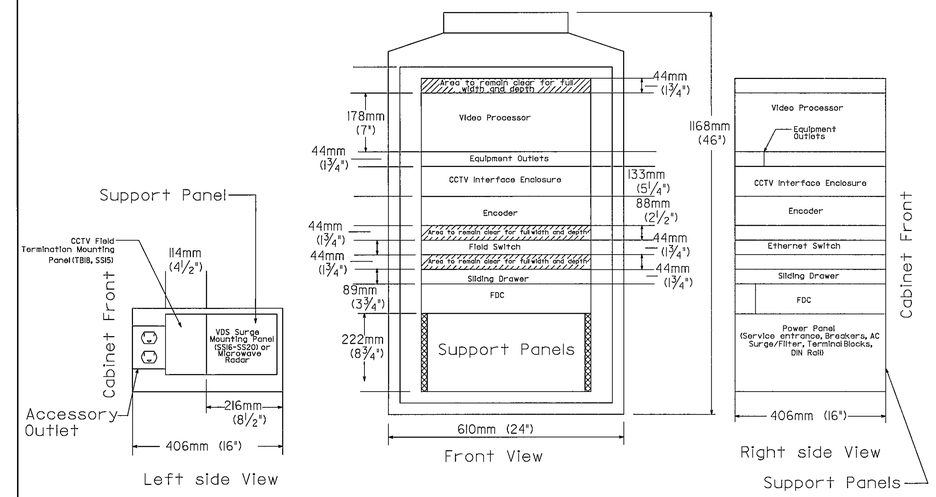

1. All dimension and scale are approximate.
2. FDC (Fiber Distribution Center) required and paid for in Section 935
3. Support Panels shall be mounted inside the cabinet rack cage.
4. Removal of a Support Panel or Mounting Panel shall not require the removal of any other cabinet component.

SUPPORT PANEL, TYPES D CABINETS

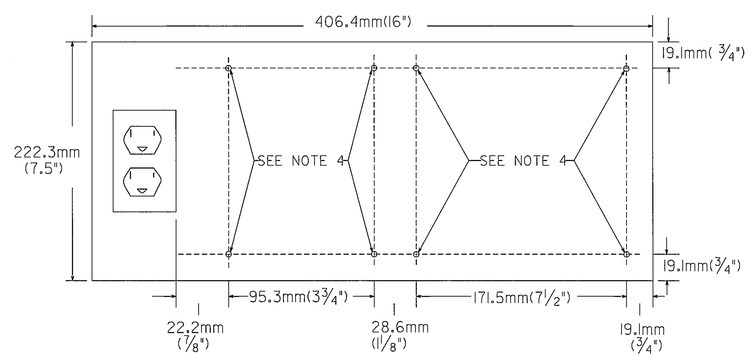

1. All dimension +\- 0.005" tolerance
2. Drawing not to scale
3. Mounting Panel shall be 0.125" 5052 Aluminum
4. Holes shall drill and tapped for 5/16-18 bolts

TYPE D CABINET POWER PANEL WIRING AND CABINET ASSEMBLY DETAIL

GEORGIA
DEPARTMENT OF TRANSPORTATION

- NO SCALE -

REVISION DATES

STATE OF GEORGIA
DEPARTMENT OF TRANSPORTATION
OFFICE: TRAFFIC OPERATIONS
SIGNAL PLANS

TYPE D CABINET DETAILS
SHEET 1 OF 1
MAY 2008

ITS-15
DRAWING No.
28-

3/1/2007 GPLW