STATE	PROJECT NUMBER	SHEET NO.	TOTAL SHEETS
GA.		676	995

CIRCULAR PRECAST ALTERNATE

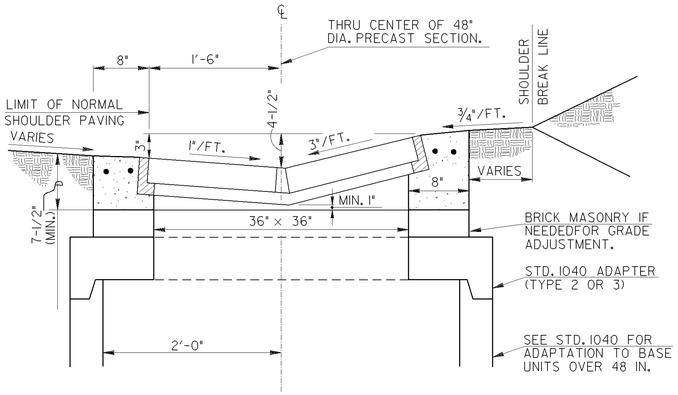

FRAME

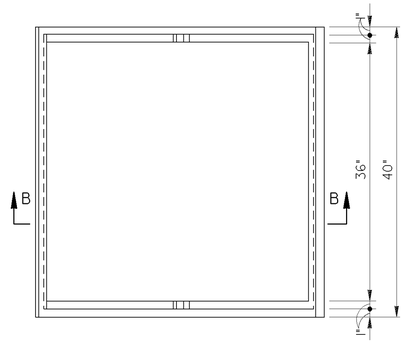

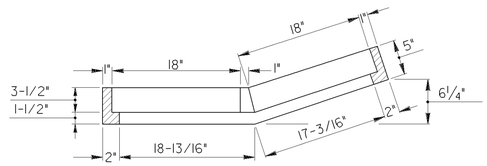

SECTION B-B

NOTE:
FRAME AND GRATE SHALL BE GRAY IRON DRAINAGE CASTINGS. SEE GEORGIA D.O.T. STANDARD SPECIFICATIONS 854.

GRATE

GRATE - 2 EACH REQUIRED

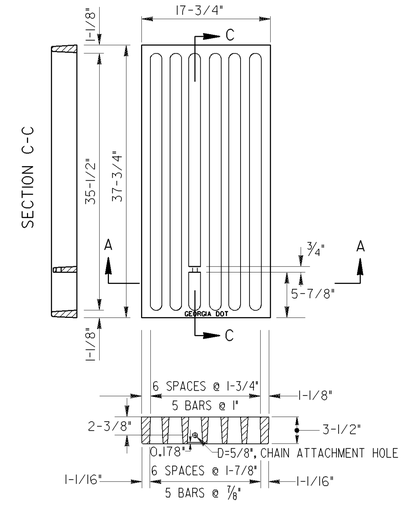

SECTION A-A

NOTE:
GRATE SHOWN ABOVE SHALL NOT BE USED WHERE BICYCLES ARE PERMITTED. SEE CONSTRUCTION DETAIL D-33B FOR BICYCLE GRATE.

SECURITY CHAIN

INSTALL SECURITY CHAIN ON BOTH GRATES
(SEE NOTE 8)

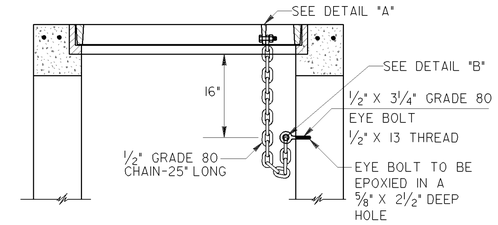

CHAIN CONNECTION DETAILS

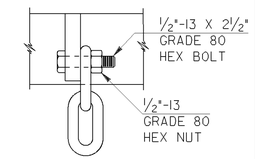

DETAIL "A"
BOLTED CONNECTION DETAIL

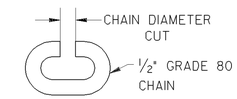

CUT CHAIN AND CONNECT CHAIN TO EYE BOLT AND THEN FIELD WELD TO FILL GAP.

DETAIL "B"
CUT CHAIN LINK DETAIL

SPECIAL DESIGN "V" GUTTER DESIGN

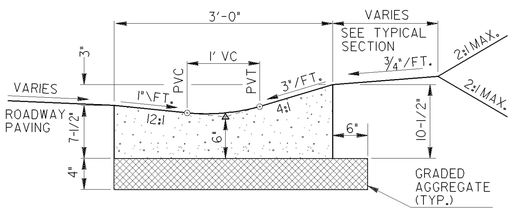

1. CONCRETE SHALL BE CLASS "A", OR PER SECTION 441.
2. BASIS OF PAVEMENT: CONCRETE "V" GUTTER PER LIN. FT.

STEPS

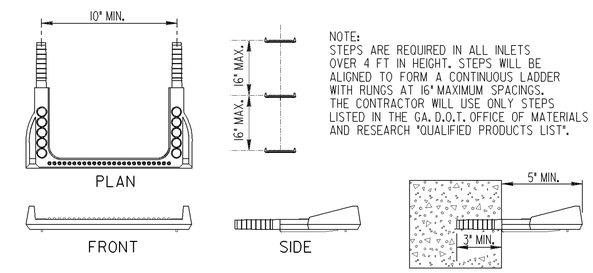

NOTE:
STEPS ARE REQUIRED IN ALL INLETS OVER 4 FT IN HEIGHT. STEPS WILL BE ALIGNED TO FORM A CONTINUOUS LADDER WITH RUNGS AT 16" MAXIMUM SPACINGS. THE CONTRACTOR WILL USE ONLY STEPS LISTED IN THE GA. D.O.T. OFFICE OF MATERIALS AND RESEARCH "QUALIFIED PRODUCTS LIST".

DEPRESSED INLET

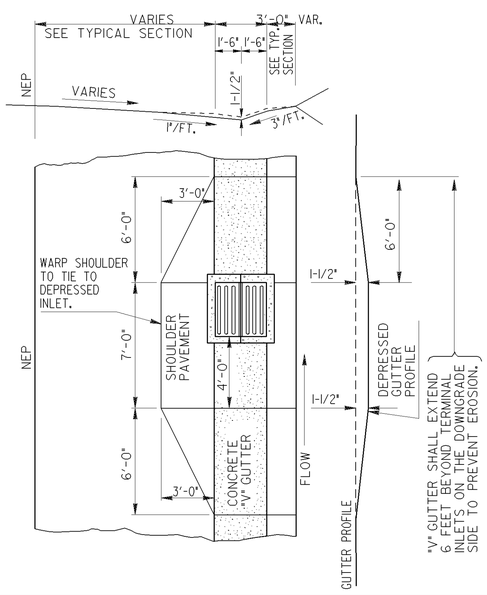

TYPE "V" INLET

(15" PIPE TO 30" TYP.)

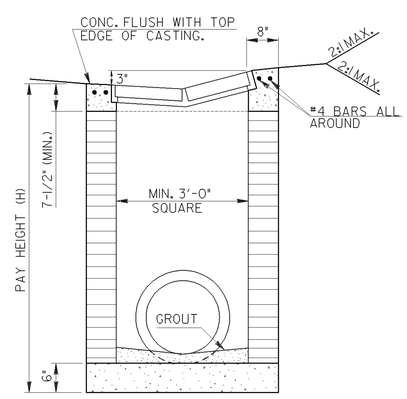

MIN. H FOR PIPES TO 30'	
PIPE SIZE	MIN. "H"
15"	3'-9"
18"	4'-2"
24"	4'-9"
30"	5'-4"

THICKNESS OF BRICK WALLS	
DEPTH	THICKNESS
0'-10'	8"
10'-20'	12"
OVER 20'	16"

TYPE "V" INLET

DETAIL FOR EXTRA WIDTH TYPE "V" INLETS WHERE REQUIRED TO ACCOMODATE PIPES LARGER THAN 30" (TYPICAL) OR SKEWED PIPES

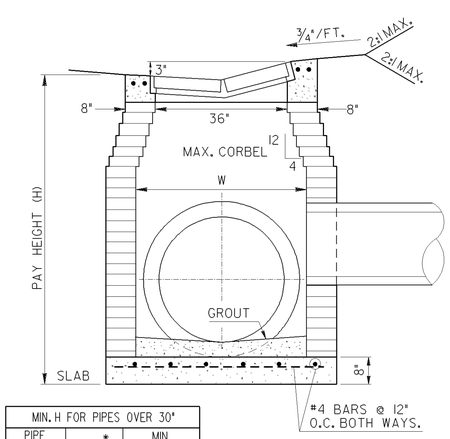

MIN. H FOR PIPES OVER 30'		
PIPE SIZE	W *	MIN. H
36'	4'-0"	6'-6"
42"	4'-8"	7'-8"
48"	5'-0"	8'-2"
54"	5'-6"	9'-9"
60"	6'-6"	11'-9"

* W TO BE INCREASED WHERE NECESSARY TO ACCOMODATE LARGER PIPES OR PIPES ON SKEWS WITH MINIMUM H INCREASED ACCORDINGLY.

GENERAL NOTES:

1. SEE SECTION 668. OF GEORGIA D.O.T. STANDARD SPECIFICATIONS FOR MATERIALS, CONSTRUCTION DETAILS, MEASUREMENTS, & PAYMENT FOR THIS STRUCTURE, EXCEPT AS NOTED.
2. ALL CONCRETE SHALL BE CLASS "A" FOR BUILT-IN-PLACE INLET CONSTRUCTION. CONCRETE FOR "V" GUTTER MAY BE EITHER CLASS "A" OR PER SECTION 441. THE COST OF THE "V" GUTTER WILL BE INCLUDED IN THE OVERALL BID PRICE FOR CONCRETE V GUTTER.
3. IF "V" GUTTER INLET SYSTEM IS TERMINATED IN SAG OR LOW AREA, AN EXTENSION OF THE GUTTER PAST LOWEST INLET OR OTHER APPROVED EROSION PROTECTION SHALL BE PROVIDED.
4. CONSTRUCTION ALTERNATES FOR INLETS SHALL BE:
   (A) BRICK MASONRY AS SHOWN;
   (B) CIRCULAR PRECAST (SEE TOP LEFT & STD. 1040.)
   (C) REINFORCED CONCRETE (SEE STD. 1019-A.)
5. MINIMUM INLET DIMENSIONS GIVEN IN THE TABLES ARE TYPICAL FOR CONCRETE PIPE AND MAY BE ADJUSTED WHERE SPECIFIED BY EITHER THE DESIGNER OR THE ENGINEER.
6. THE COST OF THE STEPS AND INSTALLATION OF CHAINS, EYE BOLTS, AND HEX BOLTS SHALL BE INCLUDED IN THE OVERALL BID PRICE FOR DROP INLET.
7. APPLY TACK-WELD BEHIND THE NUT, IF CHAIN IS SECURED TO INLET OR GRATE WITH BOLT AND NUT.
8. TYPE "V" INLET HAS TWO GRATES. EACH GRATE REQUIRES CHAIN AND EYE BOLT INSTALLED.

BY	REVISION	DATE
BJQ	REV. CHAIN GRADE & DETAILS ADDED GEN. NOTES 7 & 8	8-16-13
GLO	ADDED SAFETY CHAIN DETAIL & REV. STEP DETAIL	4-4-11
GLO	REV. GEN. NOTE NO. 6 REV. GEN. NOTE NUMBER 2. GENERAL REVISION	7-09-07 6-14-90

DEPARTMENT OF TRANSPORTATION
STATE OF GEORGIA

CONSTRUCTION DETAILS

TYPE "V" INLET
"V" GUTTER DETAILS

NO SCALE

NUMBER
D-33