STATE	PROJECT NUMBER	SHEET NO.	TOTAL SHEETS
GA.		671	995

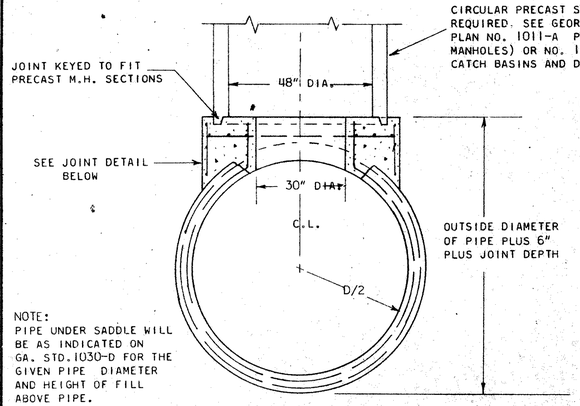

TRANSVERSE SECTION

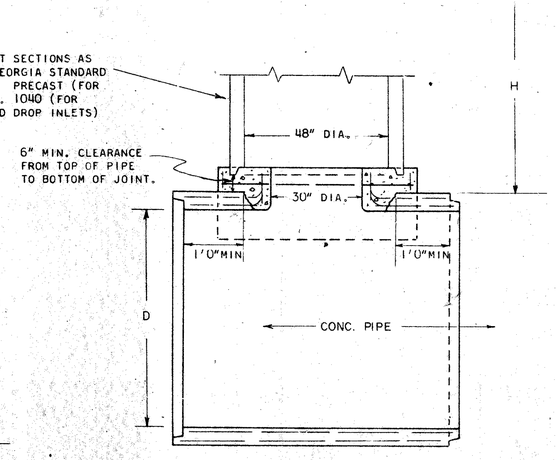

LONGITUDINAL SECTION

D = INSIDE DIAMETER (MIN. 42")

D	H (MAX.)
TO 72"	30 FT.
78"	20 FT.
84"	20 FT.
OVER 84"	15 FT.

NOTE: SADDLE NOT PERMITTED FOR HEIGHTS GREATER THAN SHOWN IN TABLE, UNLESS INDIVIDUAL STRUCTURAL JUSTIFICATION IS MADE.

NOTE: TRANSVERSE, LONGITUDINAL, DIAGONAL, CIRCUMFERENTIAL, AND PIPE REINF. NOT SHOWN HERE.

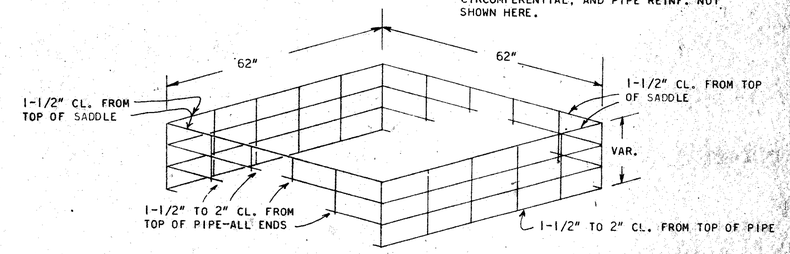

PICTORAL VIEW- VERTICAL & HORIZONTAL REINFORCEMENT

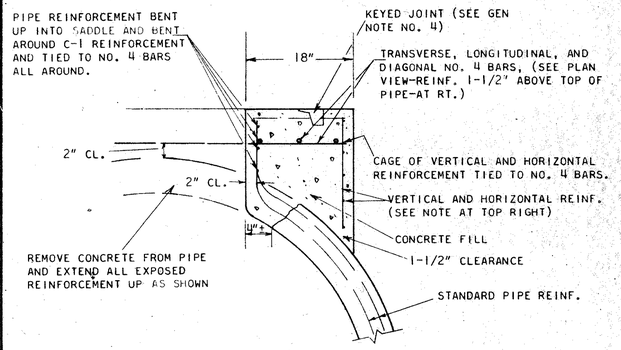

JOINT DETAIL

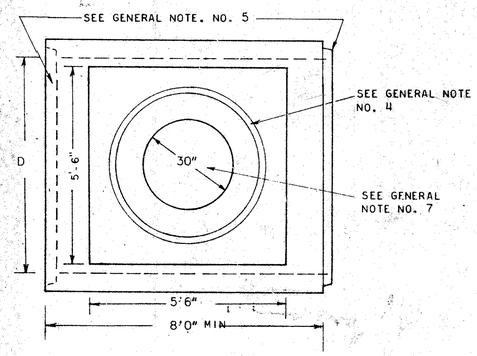

PLAN

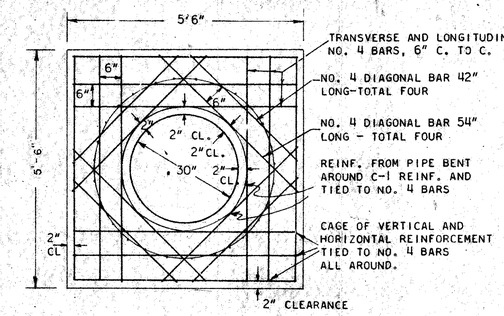

PLAN VIEW - REINFORCEMENT
(2" ABOVE TOP OF PIPE)

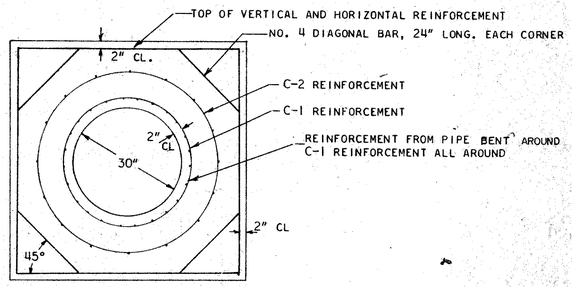

PLAN OF TOP REINFORCING
(2" FROM TOP OF SADDLE)

NOTE:
SADDLE PORTION OF STRUCTURE MAY BE PRECAST OR BUILT-IN PLACE ONTO PIPE SECTION AS SHOWN.

OR

SADDLE MAY BE PRECAST SEPARATELY AND ATTACHED TO PIPE WITH EPOXY. EXPOSED REINFORCEMENT FROM PIPE WILL BE CUT OFF AT OPENING IF THIS METHOD IS USED.

SPECIAL NOTE:
REINFORCED CONCRETE SADDLE WILL NOT BE PERMITTED WHERE TOP OF STRUCTURE IS LOCATED IN ROADWAY OR SUBJECT TO CONTINUOUS ROADWAY TRAFFIC.

GENERAL NOTES:

1. SPECIFICATIONS: GEORGIA STANDARD SPECIFICATIONS AND/OR SPECIAL PROVISIONS.
2. FOR STRUCTURE DETAILS NOT SHOWN SEE:
   MANHOLES - STANDARDS 1011-A AND 1011-A PRECAST
   CATCH BASINS AND DROP INLETS - STANDARD 1040 AND APPLICABLE STD. FOR CATCH BASIN OR DROP INLET.
   PIPE CULVERTS - STANDARD 1030-D
3. REQUIREMENTS FOR TRENCH CONSTRUCTION, BACKFILL MATERIALS, ETC., SHALL BE THE SAME FOR TEE SECTION AS FOR THE ADJOINING PIPE CULVERT.
4. KEYED JOINT - WHERE PRECAST CIRCULAR MANHOLE SECTIONS ARE TO BE LOCATED ON TOP OF SADDLE, A CIRCULAR KEYED JOINT WILL BE REQUIRED. JOINT SHALL BE DESIGNATED TO MATCH WITH RISER SECTIONS AND SHALL PROVIDE BEARING SURFACE AREA EQUAL TO THAT OF RISER JOINTS. KEYED JOINT MAY BE PROTRUDED OR RECESSED (AS SHOWN) SO LONG AS THE 6" MIN. CLEARANCE (SEE LONGITUDINAL SECTION) IS RETAINED.
5. JOINT SHOWN FOR HORIZONTAL CONNECTION TO PIPE IS ONLY TYPICAL. TEE JOINT WILL BE OF SAME DESIGN AND KIND AS ADJOINING PIPE CULVERT.
6. PAYMENT FOR INLET, MANHOLE, JUNCTION BOX, OR CATCH BASIN AND PAYMENT FOR PIPE WILL INCLUDE SADDLE, PIPE WITH OPENING, AND ALL INCIDENTALS NECESSARY TO COMPLETE THE ITEM AS SHOWN.
7. 30" DIAMETER OPENING MAY BE REDUCED (18" MIN.) FOR DROP INLETS. RECTANGULAR OR SQUARE STRUCTURES OF SIZES AND DIMENSIONS SHOWN ON APPLICABLE STANDARD DETAILS MAY BE CONSTRUCTED ON TOP OF SADDLE IN LIEU OF THE 48" DIAMETER CIRCULAR RISERS SHOWN.

ADDITIONAL REINFORCEMENT REQUIRED:

VERTICAL AND HORIZONTAL REINFORCEMENT WILL CONSIST OF A CAGE OF 2/2 6×6 WELDED WIRE FABRIC OR NO. 4 BARS SPACED 12" C. TO C. (MAX.) MEETING THE DIMENSIONS AND CLEARANCES SHOWN.

TRANSVERSE, LONGITUDINAL, AND DIAGONAL REINFORCEMENT WILL BE NO. 4 BARS.

ALL REINFORCEMENT EXTENDING FROM PIPE WILL BE TIED TO TRANSVERSE AND LONGITUDINAL REINFORCEMENT AT ALL POINTS OF TANGENCY.

C-1 REINFORCEMENT: FOUR NO. 3 RINGS IN THROAT OF TEE, 2-1/2" C. TO C. REINFORCEMENT FROM PIPE EXTENDED UP AND BENT AROUND THESE RINGS ALL AROUND.

C-2 REINFORCEMENT: SAME REINFORCEMENT AS REQUIRED FOR PRECAST MANHOLE RISER SECTIONS (A.S.T.M. C-476) PROVIDING A MINIMUM OF TWO LINES OF CIRCUMFERENTIAL REINFORCEMENT WITH A MINIMUM OF ONE LINE OF CIRCUMFERENTIAL REINFORCEMENT IN KEYED JOINT. C-2 REINFORCEMENT MAY BE OMITTED WHERE CIRCULAR RISERS WILL NOT BE REQUIRED ON SADDLE.

CONSTRUCTION DETAILS

REINFORCED CONCRETE SADDLE FOR PIPE CULVERTS

REVISED - R.M.U. 6-15-76

D-18

Diazogen N. O. 13848-3 "Approved Film"