STATE	PROJECT NUMBER	SHEET NO.	TOTAL SHEETS
GA.	INMHO-0285-01(354)	656	995

* - RADIAL DIMENSIONS

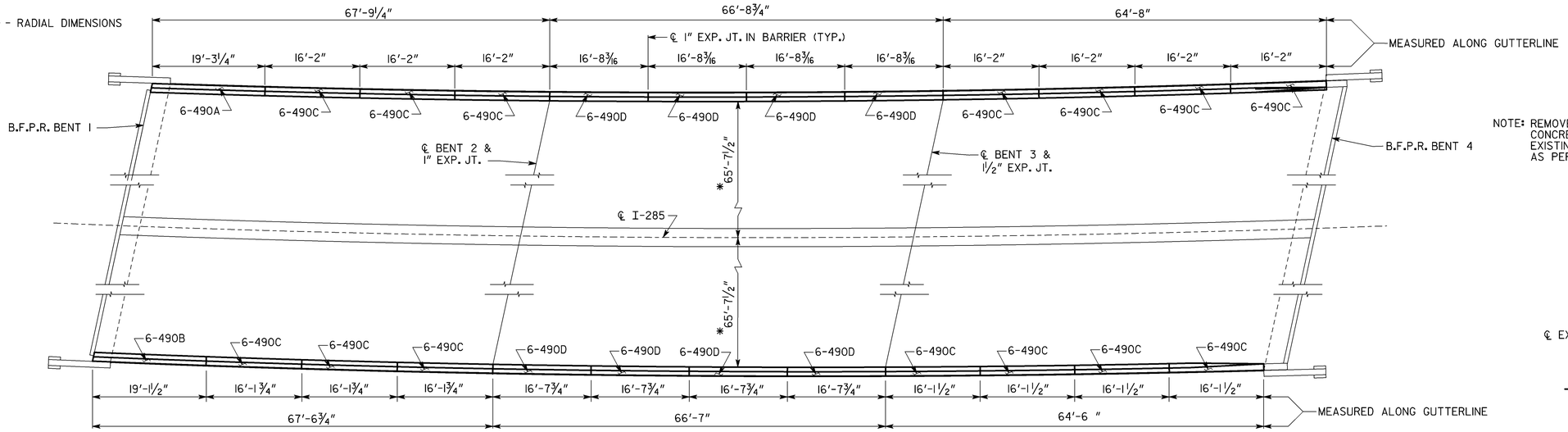

SPAN 1 SPAN 2 SPAN 3

PARTIAL DECK PLAN

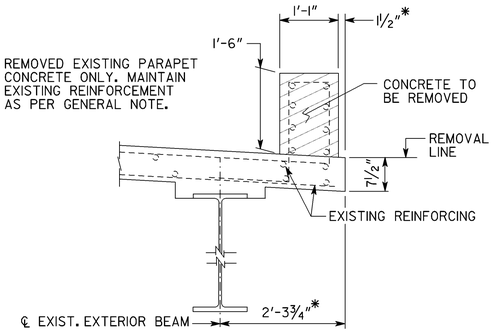

SECTION OF EXISTING PARAPET

SCALE: ¾" = 1'-0"

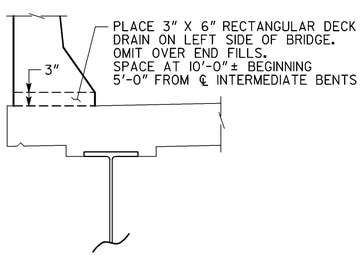

DECK DRAIN DETAIL

SCALE: ¾" = 1'-0"

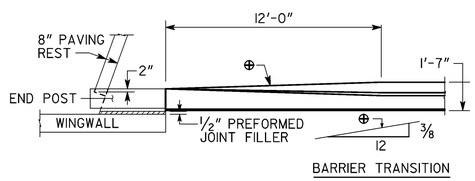

BARRIER TRANSITION DETAIL

SCALE: ¼" = 1'-0"

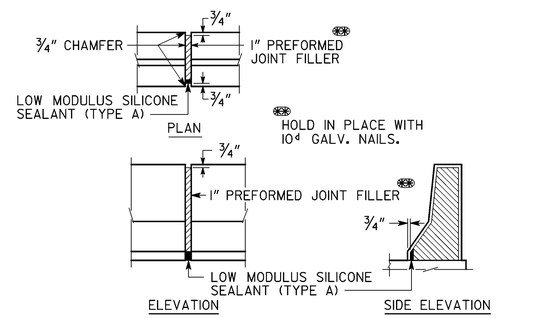

DETAILS OF 1" EXPANSION JOINT IN BARRIER

NO SCALE

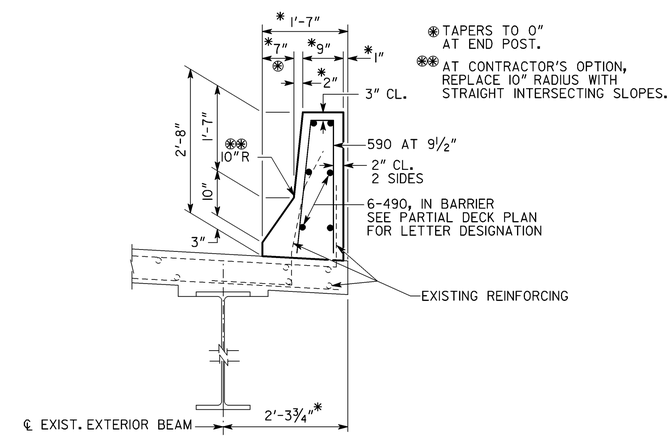

SECTION OF NEW BARRIER

SCALE: ¾" = 1'-0"

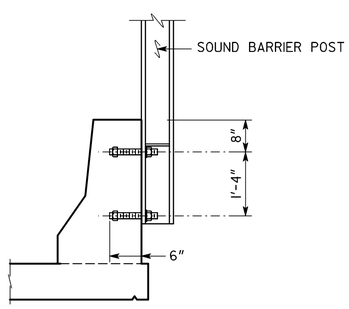

CAST IN PLACE SOUND BARRIER ANCHOR DETAIL

(SEE SOUND BARRIER SECTION FOR INFORMATION)

LOCATION	NO. OF LOC.	MARK	LENGTH FT.	LENGTH IN.	NO. BARS REQ'D.	TYPE	A	G	B FT.	B IN.	C FT.	C IN.	D FT.	D IN.	E FT.	E IN.	F FT.	F IN.	H FT.	H IN.	J FT.	J IN.	K FT.	K IN.	N	θ
SPAN 1	1								SUPERSTRUCTURE EPOXY																	
		490A	18-	11	6	1																				
		490B	18-	9	6	1																				
		490C	15-	9	36	1																				
		590	4-	11	178	23			0-	5	2-	3	2-	3											84	
SPAN 2	1								SUPERSTRUCTURE EPOXY																	
		490D	16-	4	48	1																				
		590	4-	11	176	23			0-	5	2-	3	2-	3											84	
SPAN 3	1								SUPERSTRUCTURE EPOXY																	
		490C	15-	9	48	1																				
		590	4-	11	168	23			0-	5	2-	3	2-	3											84	

BRIDGE NO. 2

GEORGIA

DEPARTMENT OF TRANSPORTATION

PRECONSTRUCTION DIVISION-OFFICE OF BRIDGE DESIGN

PARAPET REPLACEMENT DETAILS

I-285 OVER SHOAL CREEK

DEKALB COUNTY INMHO-0285-01(354)

SCALE: 1" = 10'-0" (UNLESS NOTED) DECEMBER 2013

DRAWING NO. 35-031

BRIDGE SHEET 3 OF 4

DATE | REVISIONS | BY

DESIGNED DDF | CHECKED JH-D | REVIEWED DLC/WMD

DRAWN DDF | DESIGN GROUP DDF | APPROVED BFR

1 INCH WHEN PRINTED FULL SIZE

D713290B2.DGN