STATE	PROJECT NUMBER	SHEET NO.	TOTAL SHEETS
GA.	INMHO-0285-01(354)	645	995

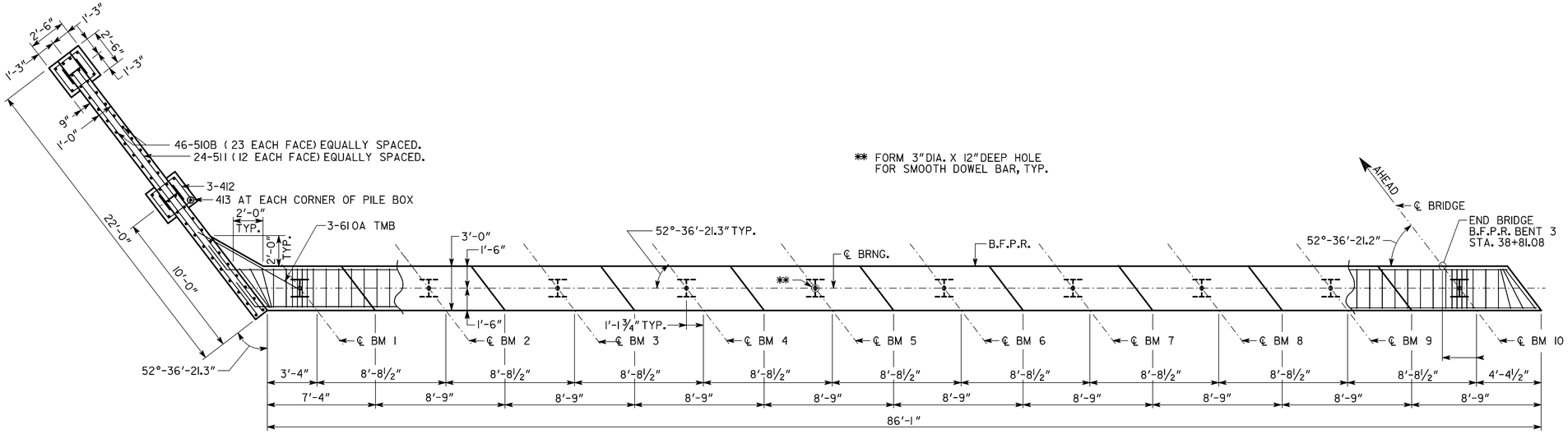

PLAN

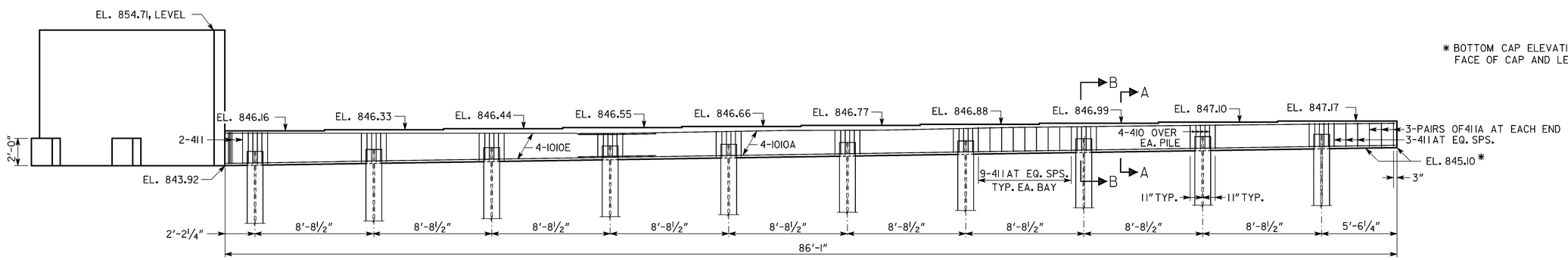

* BOTTOM CAP ELEVATIONS ARE TRUE AT FRONT FACE OF CAP AND LEVEL ACROSS CAP STEP.

ELEVATION
BENT 3
(LOOKING AHEAD)

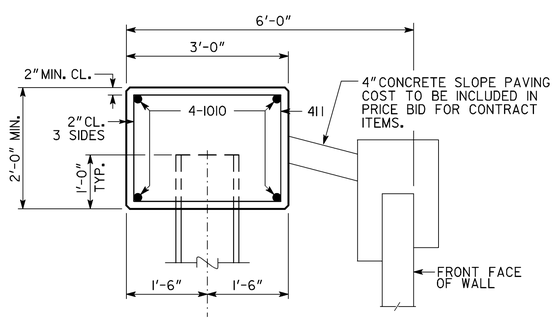

SECTION A-A

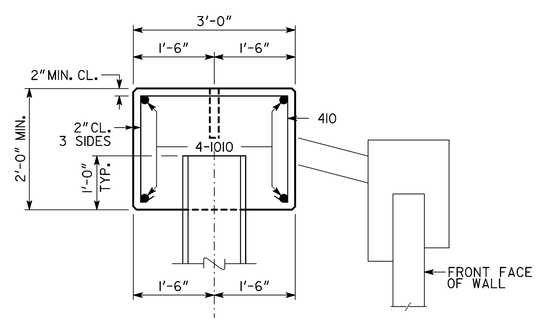

SECTION B-B

NOTES:

1. POUR WINGWALLS MONOLITHICALLY WITH CAP.
2. MAINTAIN 2" CL. ON ALL REINFORCEMENT UNLESS OTHERWISE NOTED.
3. WINGWALL PILES NOT SHOWN.
4. LAP 1010A AND 1010E BARS 7'-10" MINIMUM.
5. SEE GA. STD. 9037 FOR DRAINAGE DETAILS.
6. SEE WALL SHEET 32-24 FOR BACKFILL STABILIZING DEVICE AT END BENT.

ALL PILES SHALL BE STEEL H, HP 14 X 102.

PLAN DRIVING OBJECTIVE

ALL PILES SHALL BE DRIVEN TO A DRIVING RESISTANCE OF 130 TONS AFTER A MINIMUM TIP ELEVATION OF 820 IS ACHIEVED.

SUBSTRUCTURE QUANTITIES

ITEM	BENT 3
CU YD CLASS "AA" CONCRETE	30.5
LB BAR REINFORCEMENT STEEL	3566

BRIDGE NO. 1

GEORGIA
DEPARTMENT OF TRANSPORTATION
ENGINEERING DIVISION-OFFICE OF BRIDGES AND STRUCTURES

END BENT 3 DETAILS - STAGE II
S.R. 155 (FLAT SHOALS ROAD) OVER I-285
DEKALB COUNTY IMNHO-0285-01(354)

SCALE: 1/4" = 1'-0" NOVEMBER 2013

DRAWING NO. 35-020
BRIDGE SHEET 20 OF 28

DESIGNED J.H.-D. CHECKED D.D.F. REVIEWED D.L.C./W.M.D.
DRAWN E.M.M./J.H.-D. DESIGN GROUP D.D.F. APPROVED B.F.R.

REVISIONS BY DATE

1 INCH WHEN PRINTED FULL SIZE

12:56:19 PM
w:\E_Jenny\Final Flat Shoals 4-14\D7132908i.dgn