STATE	PROJECT NUMBER	SHEET NO.	TOTAL SHEETS
GA.	IMNHO-0285-01(354)	641	995

*FORM 3" DIAMETER X 12" DEEP HOLE FOR DOWEL BAR.

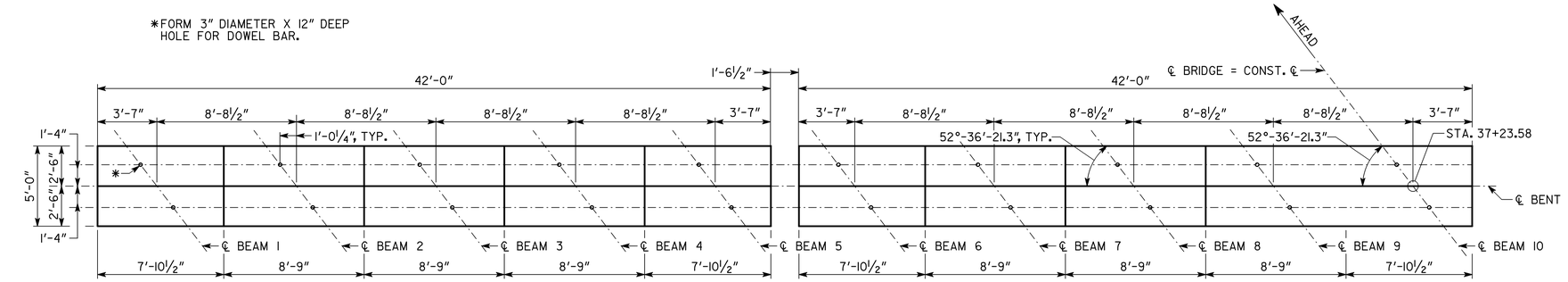

PLAN

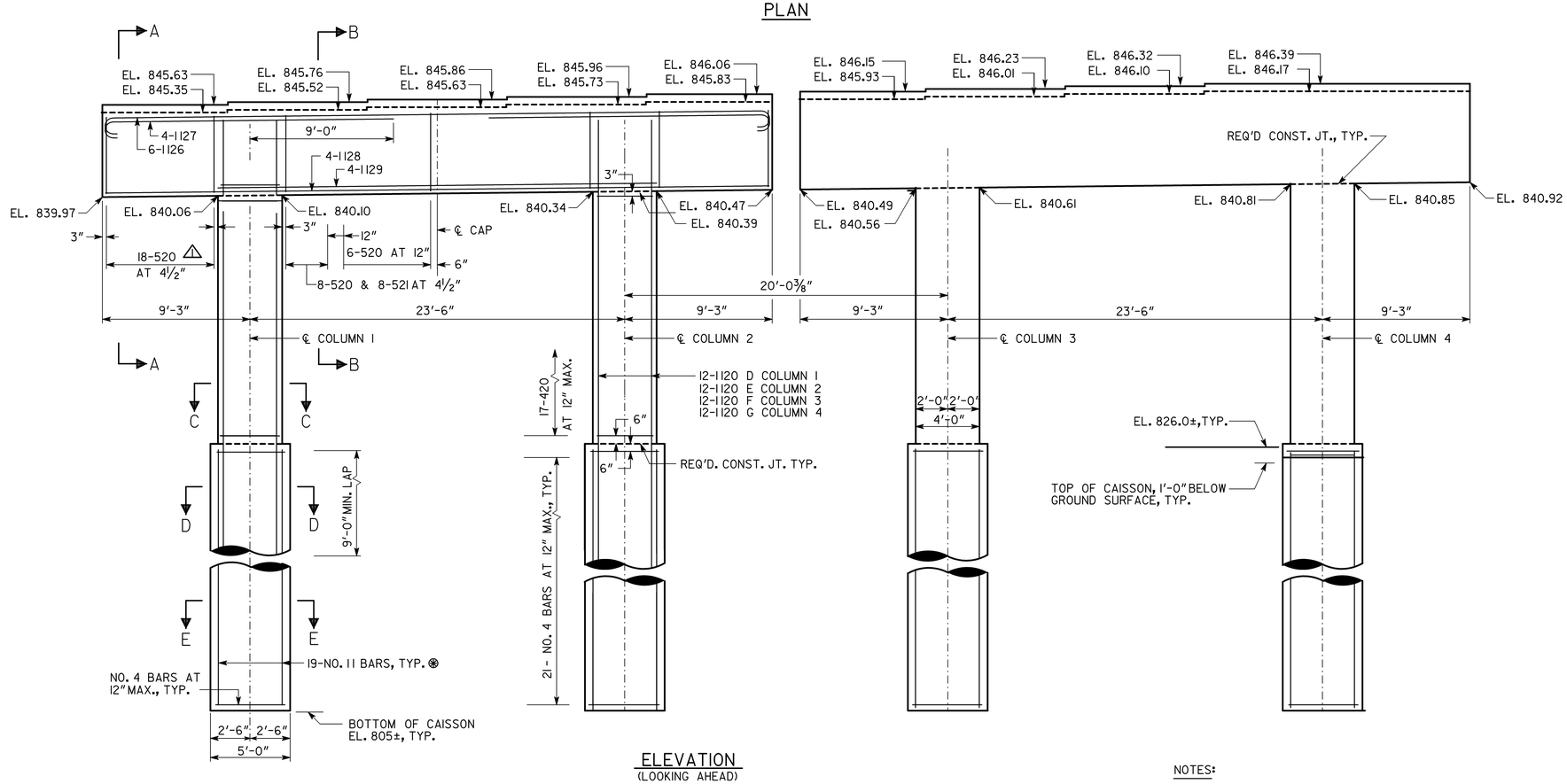

ELEVATION
(LOOKING AHEAD)

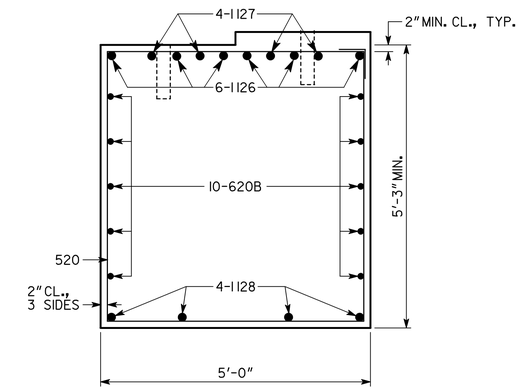

SECTION A-A
NO SCALE

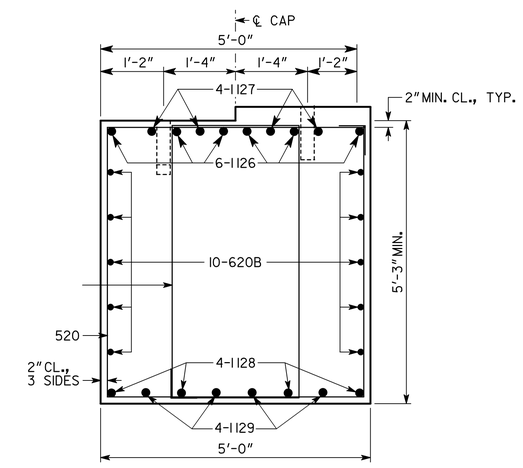

SUBSTRUCTURE QUANTITIES	
ITEM	BENT 2 STAGE II
CY CLASS "AA" CONCRETE	114.4
LB BAR REINF STEEL	19976 ~~19556~~ △1

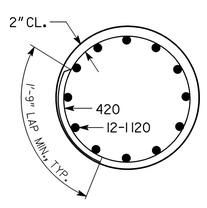

SECTION C-C

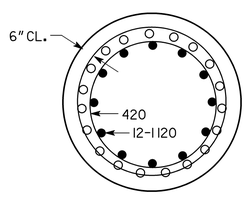

SECTION D-D

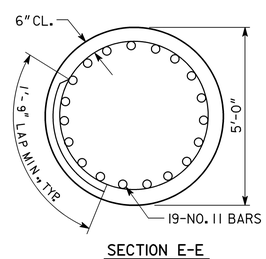

SECTION E-E

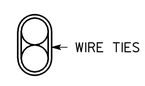

BARS TO BE BUNDLED SHALL BE BUNDLED VERTICALLY

BUNDLING DETAIL

NOTES:

1. MAINTAIN 2" CL. ON ALL REINFORCEMENT UNLESS OTHERWISE NOTED.
2. BENT CAP IS SYMMETRICAL ABOUT ℄ CAP.
3. BARS 620B NOT SHOWN IN ELEVATION VIEW.
5. CAISSONS ARE DESIGNED FOR A BEARING PRESSURE OF 120 KSF ON SOLID ROCK.
6. CAISSONS SHALL BE SOCKETED A MINIMUM OF 7'-0" INTO SOUND ROCK.
7. TEMPORARY SHORING WILL BE REQUIRED TO INSTALL CAISSONS.
8. QUANTITIES AND REINFORCEMENT LENGTHS WERE CALCULATED BASED ON AN ASSUMED GROUND SURFACE ELEVATION OF 826.00.

REVISIONS		
BY	REVISED REINFORCING	DATE 07-08-14
JH-D		

BRIDGE NO. 1 - ALT. 1

GEORGIA
DEPARTMENT OF TRANSPORTATION
ENGINEERING DIVISION-OFFICE OF BRIDGES AND STRUCTURES

INTERMEDIATE BENT 2 - STAGE II ALT. 1
S.R. 155 (FLAT SHOALS ROAD) OVER I-285
DEKALB COUNTY IMNHO-0285-01(354)

DRAWING NO. 35-016
BRIDGE SHEET 16 OF 28

1/4" = 1'-0" UNLESS NOTED NOVEMBER 2013

DESIGNED J.H.-D. CHECKED D.D.F. REVIEWED D.L.C./W.M.D.
DRAWN E.M.M./J.H.-D. DESIGN GROUP D.D.F. APPROVED B.F.R.

1 INCH WHEN PRINTED FULL SIZE

...\D713290B1.dgn 8/5/2014 1:14:47 PM