STATE	PROJECT NUMBER	SHEET NO.	TOTAL SHEETS
GA.	INMHO-0285-01(354)	638	995

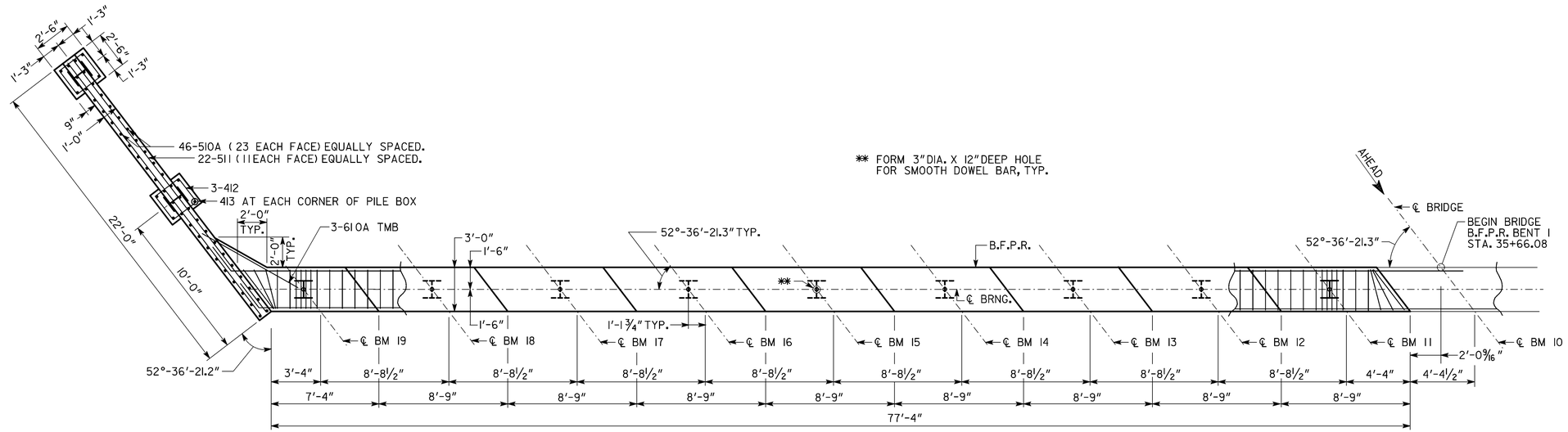

PLAN

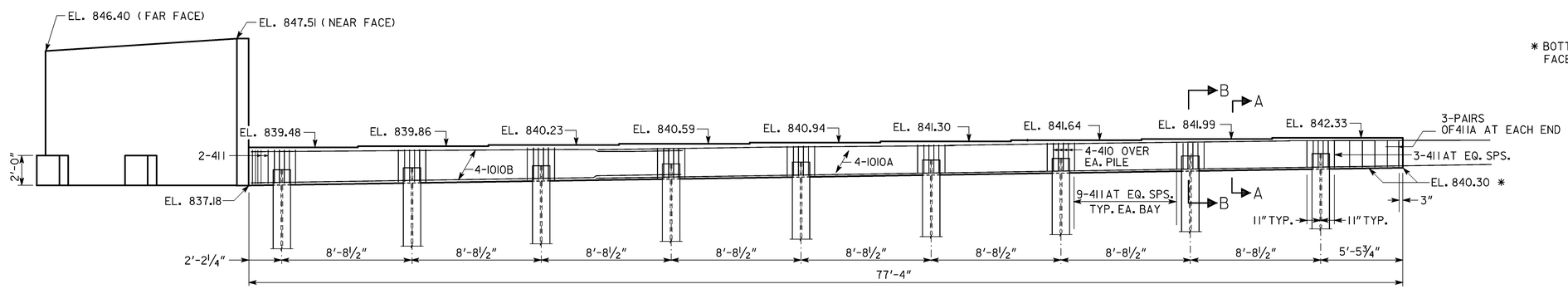

* BOTTOM CAP ELEVATIONS ARE TRUE AT FRONT FACE OF CAP AND LEVEL ACROSS CAP STEP.

ELEVATION
BENT 1
(LOOKING BACK)

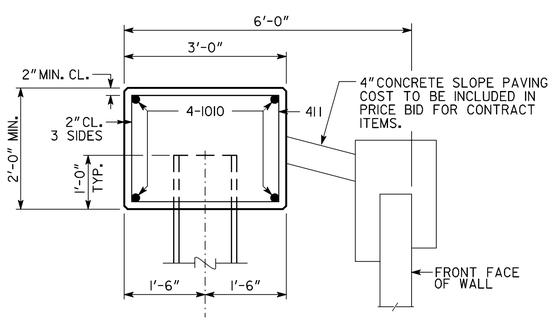

SECTION A-A

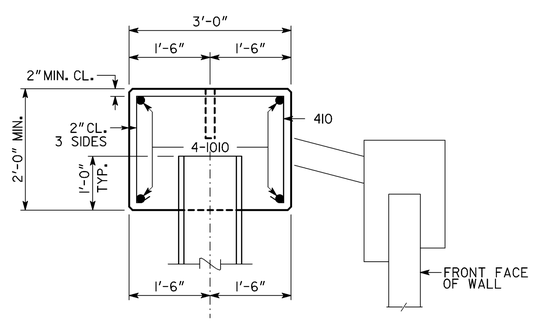

SECTION B-B

NOTES:

1. POUR WINGWALLS MONOLITHICALLY WITH CAP.
2. MAINTAIN 2" CL. ON ALL REINFORCEMENT UNLESS OTHERWISE NOTED.
3. WINGWALL PILES NOT SHOWN.
4. LAP 1010A AND 1010B BARS 7'-10" MINIMUM.
5. SEE GA. STD. 9037 FOR DRAINAGE DETAILS.
6. SEE WALL SHEET 32-24 FOR BACKFILL STABILIZING DEVICE AT END BENT.

ALL PILES SHALL BE STEEL H, HP 14 X 102.

PLAN DRIVING OBJECTIVE

ALL PILES SHALL BE DRIVEN TO A DRIVING RESISTANCE OF 130 TONS AFTER A MINIMUM TIP ELEVATION OF 815 IS ACHIEVED.

SUBSTRUCTURE QUANTITIES

ITEM	BENT 1
CU YD CLASS "AA" CONCRETE	27.6
LB BAR REINFORCEMENT STEEL	3380

BRIDGE NO. 1

GEORGIA
DEPARTMENT OF TRANSPORTATION
ENGINEERING DIVISION-OFFICE OF BRIDGES AND STRUCTURES

END BENT 1 DETAILS - STAGE I
S.R. 155 (FLAT SHOALS ROAD) OVER I-285
DEKALB COUNTY IMNHO-0285-01(354)

SCALE: 1/4" = 1'-0" NOVEMBER 2013

DRAWING NO. 35-013
BRIDGE SHEET 13 OF 28

REVISIONS | DATE | BY

DESIGNED J.H.-D. | CHECKED D.D.F. | REVIEWED D.L.C./W.M.D.
DRAWN E.M.M./J.H.-D. | DESIGN GROUP D.D.F. | APPROVED B.F.R.

1 INCH WHEN PRINTED FULL SIZE

w:\E_Jenny\Final Flat Shoals 4-14\D7132908i.dgn 12:54:31 PM