VOID

STATE	PROJECT NUMBER	SHEET NO.	TOTAL SHEETS
GA.	IMNHO-0285-01(354)	632	995

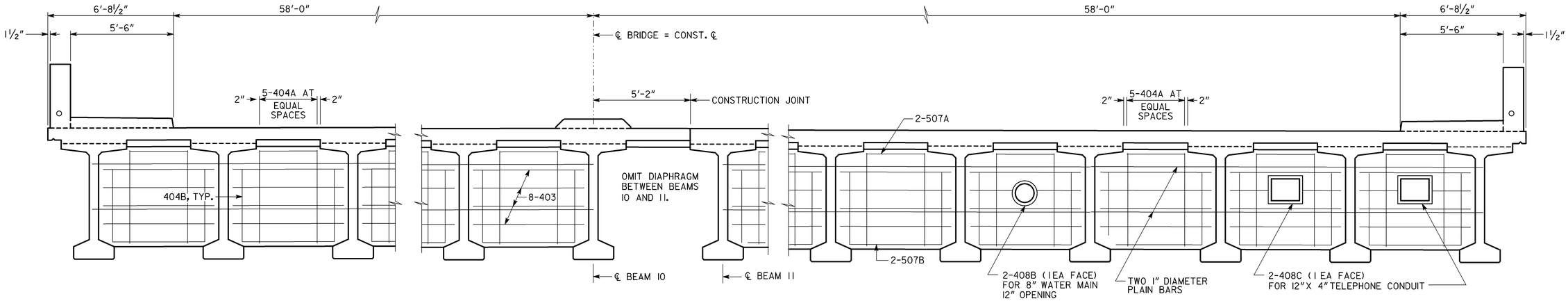

SECTION THRU DIAPHRAGM

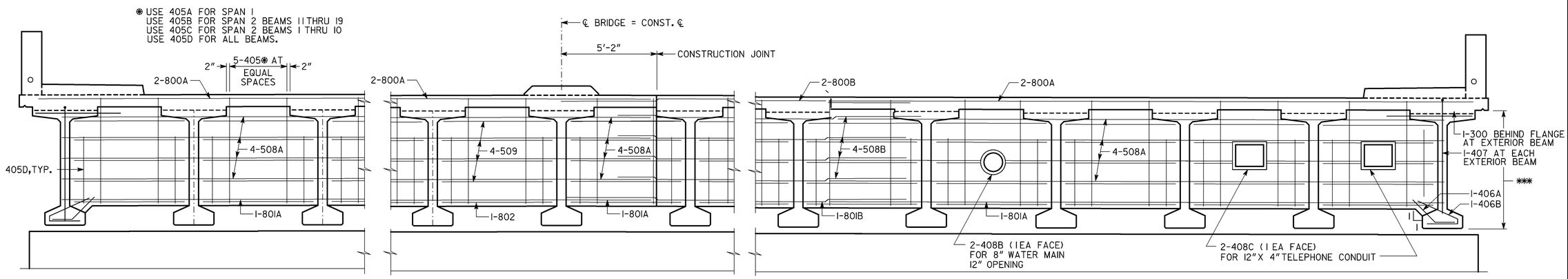

*** POUR EDGE BEAM FLUSH WITH OUTSIDE FACE OF BEAM.

SECTION THRU EDGE BEAM

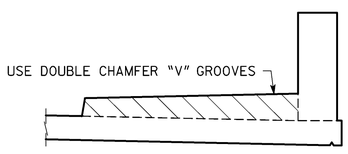

CONST. JOINT DETAIL AT SIDEWALK AND PARAPET

NO SCALE

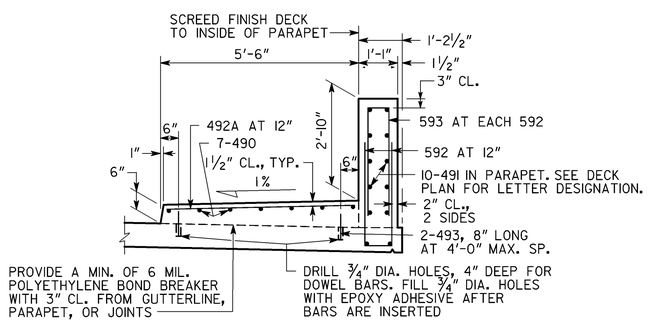

SIDEWALK AND PARAPET DETAILS FOR FENCE ATTACHMENT

NO SCALE

PLACE TRANSVERSE SIDEWALK MARKINGS ON SIDEWALK SPACED AT 5'-0"±.

INCLUDE COST OF BOND BREAKER AND EPOXY ADHESIVE IN PRICE BID FOR SUPERSTRUCTURE ITEMS.

NOTES:

1. SECTIONS ARE CUT LOOKING AHEAD.
2. SEE DECK PLAN SHEETS FOR LETTER DESIGNATION OF 400, 490, AND 491 BARS.
3. PLACE BARS 405 SERIES BARS, 504A, 504B, 506A & 506B PARALLEL TO THE BEAMS.
4. CLEARANCE OF REINFORCEMENT IS 2" UNLESS NOTED.
5. LAP BARS 400A, 400B, 490A, 490B, 402A, & 402B 1'-9" MINIMUM.
   LAP BARS 590A & 590B, 590A & 590C, 505A, 505B, 508A & 508B 2'-2" MINIMUM.
   LAP BARS 800A, 800B, 801A & 801B 4'-7" MINIMUM.
6. SHIFT OR CLIP BARS IN ENDWALLS, EDGEBEAMS, AND DIAPHRAGMS TO CLEAR OPENINGS FOR UTILITIES.

BRIDGE NO. 1

GEORGIA
DEPARTMENT OF TRANSPORTATION
ENGINEERING DIVISION-OFFICE OF BRIDGES AND STRUCTURES

DATE | REVISIONS | BY

DECK SECTIONS - SHEET 2

S.R. 155 (FLAT SHOALS RD.) OVER I-285

DEKALB COUNTY IMNHO-0285-01(354)

DRAWING NO. 35-007

BRIDGE SHEET 7 OF 28

SCALE: ⅜" = 1'-0" UNLESS NOTED NOVEMBER 2013

DESIGNED J.H.-D. CHECKED D.D.F. REVIEWED D.L.C./W.M.D.
DRAWN E.M.M./J.H.-D. DESIGN GROUP D.D.F. APPROVED B.F.R.

1 INCH WHEN PRINTED FULL SIZE