STATE	PROJECT NUMBER	SHEET NO.	TOTAL SHEETS
GA.	IMNHO-0285-01(354)	631	995

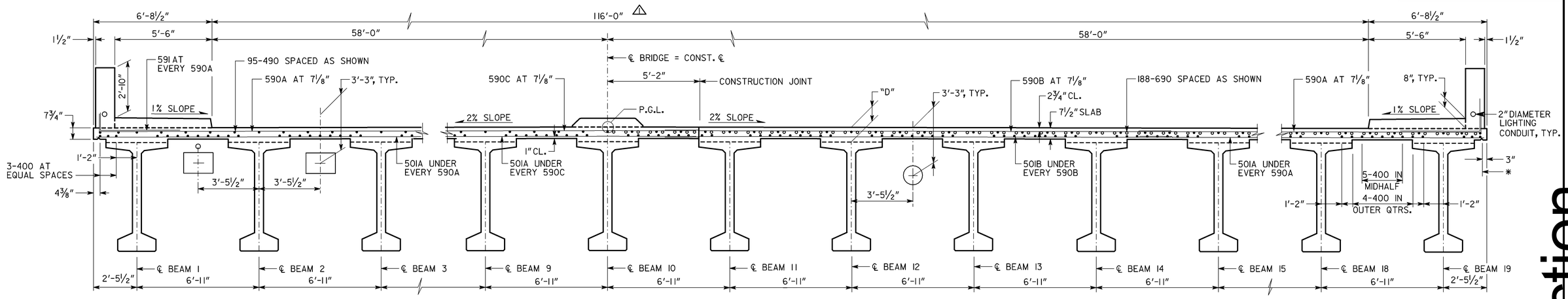

PARTIAL SECTION THRU SLAB

SECTION THRU SLAB AT INTERMEDIATE BENT

* ℄ ¾" TRIANGULAR DRIP BEAD FULL LENGTH OF BRIDGE, TYP., BOTH SIDES

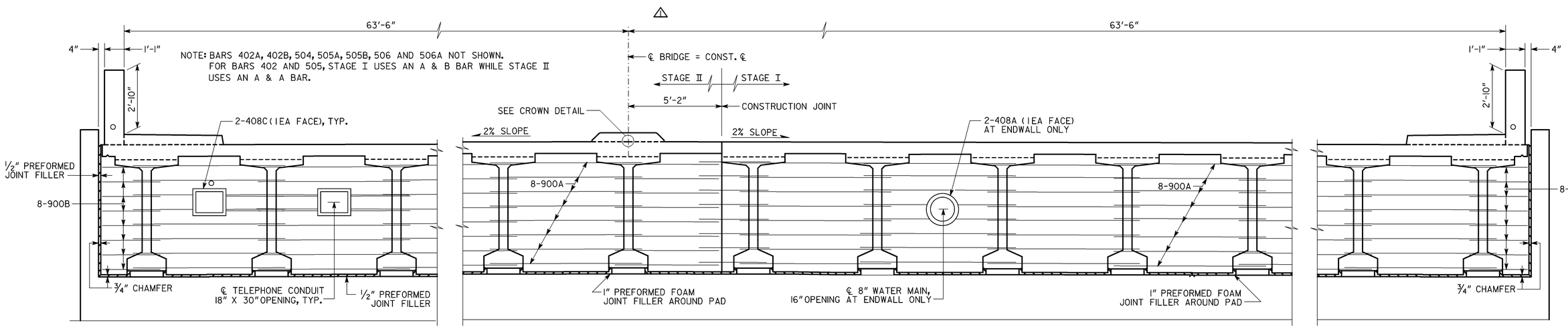

SECTION THRU ENDWALL

PLACE TRANSVERSE MARKINGS SPACED AT 5'-0"±.

COST OF BOND BREAKER AND EPOXY ADHESIVE TO BE INCLUDED IN PRICE BID FOR SUPERSTRUCTURE ITEMS.

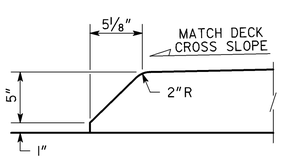

CURB FACE DETAIL
NO SCALE

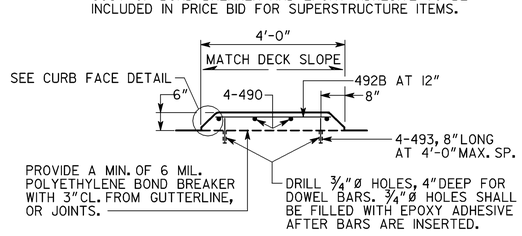

CONCRETE MEDIAN DETAILS
NO SCALE

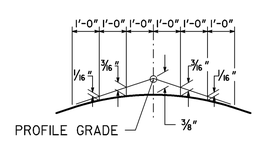

CROWN DETAIL
2% CROSS SLOPE

NOTE:

DIMENSION "D" IS MEASURED FROM TOP OF SLAB TO TOP OF BEAMS AT CENTERLINE BEARING. VARY "D" BETWEEN BEARINGS TO COMPENSATE FOR DEAD LOAD DEFLECTION AND VERTICAL CURVE. MAINTAIN A CONSTANT SLAB THICKNESS OF 7½" BETWEEN THE BEAMS AND 7¾" AT THE OVERHANGS.

TABLE OF "D" DIMENSIONS

SPAN	BEAM NO.	"D"
1	1 & 19	9¾"
1	2-18	9½"
2	1	13¾"
2	2-10	13"
2	11-19	11½"

BRIDGE NO. 1

GEORGIA
DEPARTMENT OF TRANSPORTATION
ENGINEERING DIVISION-OFFICE OF BRIDGES AND STRUCTURES

DECK SECTIONS - SHEET 1
S.R. 155 (FLAT SHOALS RD.) OVER I-285
DEKALB COUNTY IMNHO-0285-01(354)

BY	REVISIONS	DATE
JH-D	REV. UTILITY DETAILS	12-09-14

DRAWING NO. 35-006
BRIDGE SHEET 6 OF 28

SCALE: ⅜" = 1'-0" UNLESS NOTED NOVEMBER 2013

DESIGNED J.H.-D. CHECKED D.D.F. REVIEWED D.L.C./W.M.D.
DRAWN E.M.M./J.H.-D. DESIGN GROUP D.D.F. APPROVED B.F.R.

1 INCH WHEN PRINTED FULL SIZE

Use on Construction