STATE	PROJECT NUMBER	SHEET NO.	TOTAL SHEETS
GA.	IMNHO-0286-01(354)	607	995

GENERAL NOTES

SPECIFICATIONS - GEORGIA STANDARD SPECIFICATIONS, 2013 EDITION, AS MODIFIED BY CONTRACT DOCUMENTS.

REINFORCING STEEL - PLACE AND TIE ALL REINFORCING STEEL IN ACCORDANCE WITH THE GEORGIA DOT SPECIFICATIONS. DO NOT WELD REINFORCING STEEL.

FINISH - PROVIDE PLAIN CONCRETE FINISH. FINISH SHALL BE CONSISTENT WITH ALL OTHER RETAINING WALLS ON THE PROJECT.

GRAFFITI PROOF COATING - ALL MSE WALL PANELS SHALL HAVE A GRAFFITI PROOF COATING AS PER SECTION 838 OF THE GEORGIA DOT SPECIFICATIONS.

CONCRETE COVER - MAINTAIN 2 INCHES COVER MINIMUM ON ALL REINFORCING STEEL.

STATIONS AND OFFSETS - STATIONS SHOWN ARE ALONG CL I-285. OFFSETS SHOWN ARE MEASURED TO THE FRONT FACE OF WALL.

STAGE CONSTRUCTION - THE WALL MAY BE CONSTRUCTED IN STAGES TO IMPROVE THE UNDERLYING SOIL BEARING CAPACITY. CONSTRUCT WALL TO A HEIGHT RESULTING IN A SOIL BEARING PRESSURE OF 4000 POUNDS PER SQUARE FOOT, WAIT 30 DAYS, THEN CONSTRUCT ADDITIONAL STAGES OR REMAINDER OF WALL.

TEMPORARY SHORING - PROVIDE TEMPORARY SHORING AS NECESSARY FOR WALL CONSTRUCTION.

JOINTS - PROVIDE ONE INCH EXPANSION JOINT IN COPING OR BARRIER AT EVERY FOURTH PANEL.

WELDING - ALL WELDING ON GEORGIA DOT PROJECTS SHALL BE PERFORMED BY CERTIFIED WELDERS THAT HAVE IN THEIR POSSESSION A CURRENT WELDING CERTIFICATION CARD ISSUED BY THE OFFICE OF MATERIALS AND TESTING. USE ONLY E70XX (EXCLUDING E7014 AND E7024) LOW HYDROGEN ELECTRODES FOR MANUAL SHIELDED METAL ARC WELDING.

WALL PLANS - THE RETAINING WALL IS CONSIDERED A CONTRACTOR DESIGN. THESE WALL PLANS ARE CONCEPTUAL AND ARE FOR ILLUSTRATIVE PURPOSES ONLY. EXACT NUMBER OF SOIL REINFORCING STRIPS, THEIR LOCATIONS AND LENGTHS SHALL BE PROVIDED BY THE CONTRACTOR FOR THE WALL SYSTEM BID. THE PRESENCE OF THESE CONCEPTUAL PLANS IN THE CONTRACT DOCUMENTS IN NO WAY RELIEVES THE CONTRACTOR FROM PROVIDING A WALL SYSTEM WHICH PROVIDES STRUCTURAL ADEQUACY, IN ACCORDANCE WITH SECTION 627 OF THE GEORGIA DOT SPECIFICATIONS, AT THE BID PRICE.

INCIDENTAL ITEMS - INCLUDE THE COST INCIDENTAL TO THE WORK THAT IS NOT SPECIFICALLY COVERED BY THE GEORGIA STANDARD SPECIFICATIONS, SUPPLEMENTAL SPECIFICATIONS AND/OR SPECIAL PROVISIONS IN THE OVERALL BID SUBMITTED. THIS INCLUDES THE COST OF JOINT FILLERS AND OTHER INCIDENTAL ITEMS NECESSARY TO COMPLETE THE WORK.

DESIGN DATA

ALLOWABLE SOIL PRESSURE	4 KSF
COHESION	0 PSF
ANGLE OF INTERNAL FRICTION	28°
UNIT WEIGHT	120 PCF
COEFFICIENT OF SLIDING FRICTION	0.40

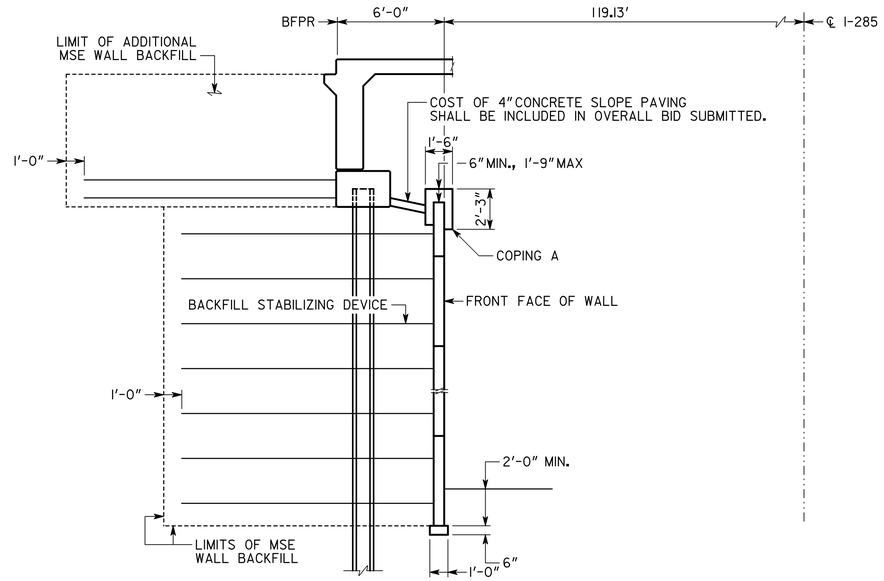

SECTION UNDER BRIDGE

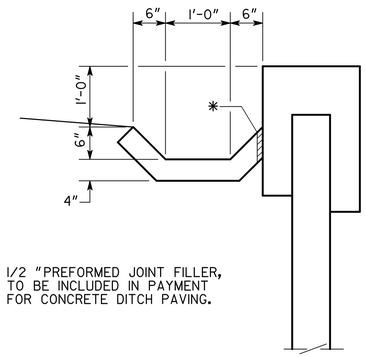

CONCRETE DITCH DETAIL

SUMMARY OF QUANTITIES - WALL NO. 6

PAY ITEM NUMBER	QUANTITY	UNIT	PAY ITEM
627-1010	1611	SF	MSE WALL FACE, 10 - 20 FT HT, WALL NO - 6
627-1020	3671	SF	MSE WALL FACE, 20 - 30 FT HT, WALL NO - 6
627-1100	264	LF	COPING A, WALL NO - 6
627-1180	574	CY	ADDITIONAL MSE BACKFILL

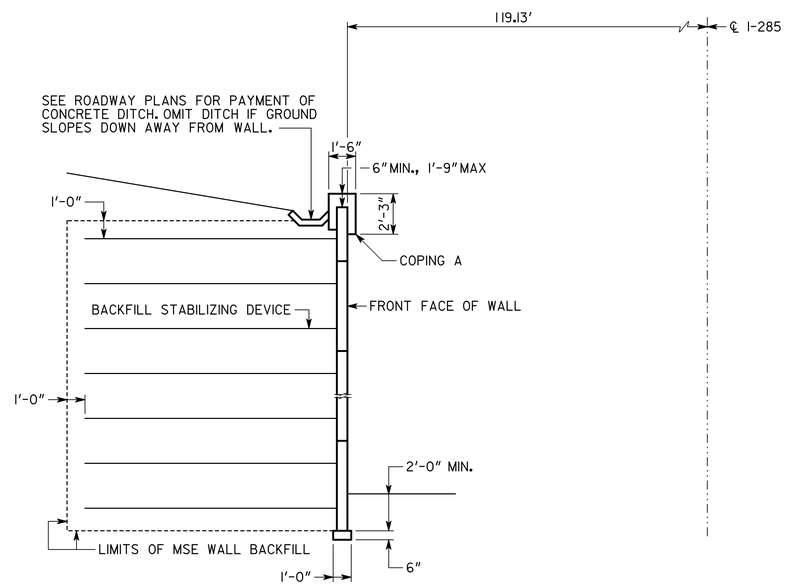

SECTION OUTSIDE OF BRIDGE

SUMMARY OF QUANTITIES - WALL NO. 7

PAY ITEM NUMBER	QUANTITY	UNIT	PAY ITEM
627-1010	385	SF	MSE WALL FACE, 10 - 20 FT HT, WALL NO - 7
627-1020	5603	SF	MSE WALL FACE, 20 - 30 FT HT, WALL NO - 7
627-1100	273	LF	COPING A, WALL NO - 7
627-1180	574	CY	ADDITIONAL MSE BACKFILL

RETAINING WALL NO. 6 & 7

GEORGIA
DEPARTMENT OF TRANSPORTATION
PRECONSTRUCTION DIVISION-OFFICE OF BRIDGE DESIGN

MISCELLANEOUS DETAILS - RET. WALLS 6 & 7
S.R. 155 (FLAT SHOALS) OVER I-285

DEKALB COUNTY IMNHO-0285-01(354)

REVISIONS | BY | DATE

DRAWING NO. 32-024
WALL SHEET 3 OF 3

NO SCALE APRIL 2014

DESIGNED J.H.-D. CHECKED D.D.F. REVIEWED D.L.C./W.M.D.
DRAWN WMC/E.M.M. DESIGN GROUP D.D.F. APPROVED B.F.R.

1 INCH WHEN PRINTED FULL SIZE

FILENAME: D713290WALLS.DGN

8/6/2014 8:56:00 AM
w:\L_Doug\713290 DeKalb\WALLS\D713290Walls.dgn