SERVICE POINT A

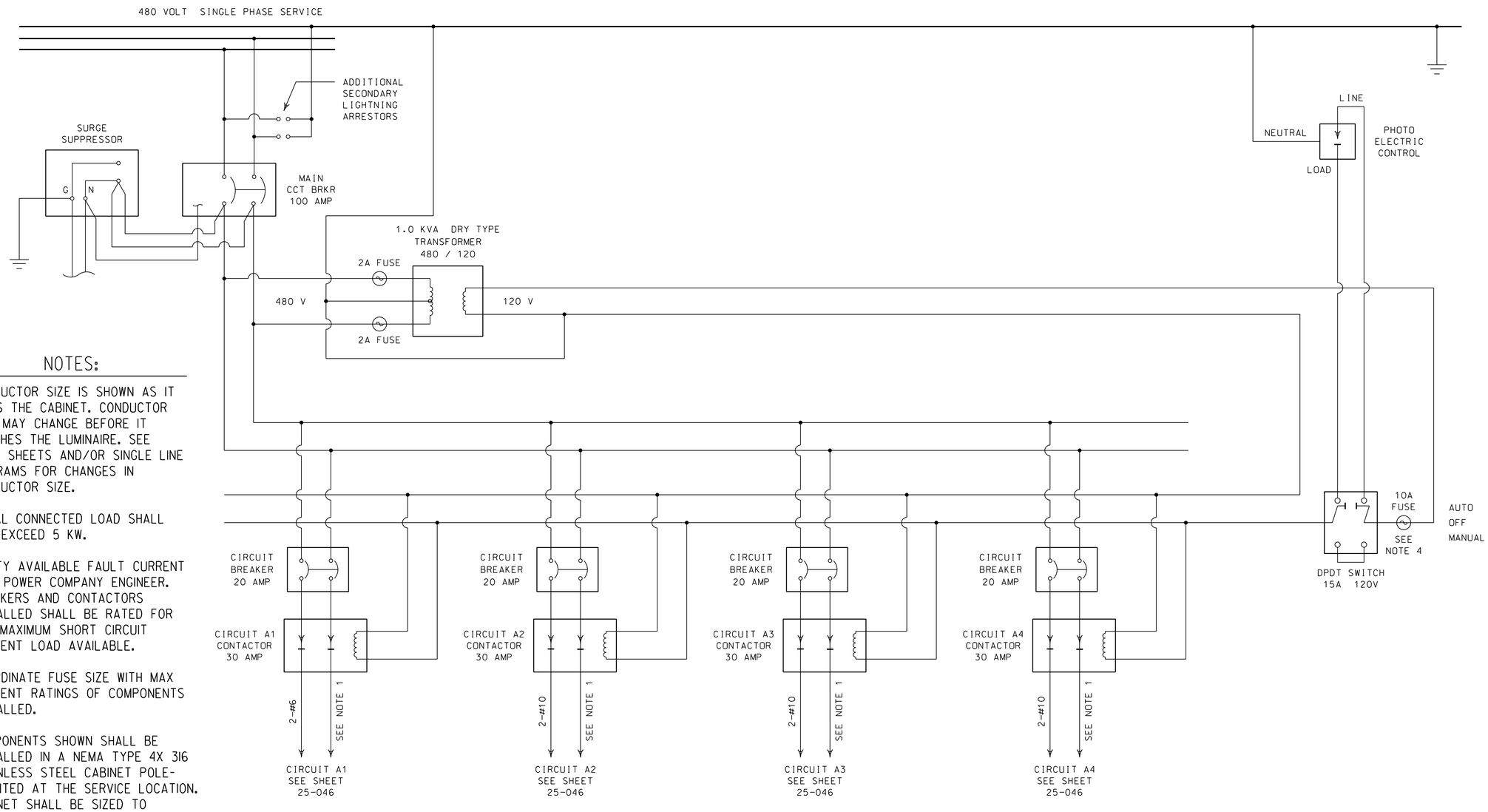

NOTES:

1. CONDUCTOR SIZE IS SHOWN AS IT EXITS THE CABINET. CONDUCTOR SIZE MAY CHANGE BEFORE IT REACHES THE LUMINAIRE. SEE PLAN SHEETS AND/OR SINGLE LINE DIAGRAMS FOR CHANGES IN CONDUCTOR SIZE.
2. TOTAL CONNECTED LOAD SHALL NOT EXCEED 5 KW.
3. VERIFY AVAILABLE FAULT CURRENT WITH POWER COMPANY ENGINEER. BREAKERS AND CONTACTORS INSTALLED SHALL BE RATED FOR THE MAXIMUM SHORT CIRCUIT CURRENT LOAD AVAILABLE.
4. COORDINATE FUSE SIZE WITH MAX CURRENT RATINGS OF COMPONENTS INSTALLED.
5. COMPONENTS SHOWN SHALL BE INSTALLED IN A NEMA TYPE 4X 316 STAINLESS STEEL CABINET POLE-MOUNTED AT THE SERVICE LOCATION. CABINET SHALL BE SIZED TO ACCOMODATE FOUR CIRCUITS AND AS APPROVED BY GDOT.