5/7/2014 Wed May 07 14:46:20 2014	\\gdot-dsn1\gacfg\resources\Gdot-2012.tbl	m:\713290\dgn\713290UTOL.dgn	STATE	PROJECT NUMBER	SHEET NO.	TOTAL SHEETS
01006507			GA		418	995

City, County, State: Decatur, Dekalb, Georgia	Test Hole # 14
General Location: SR 155/Flat Shoals Road South of I-285	Date: 01/23/14
Project ID #: 713290-	Recorded by: HJH
Project Description: I-285 at SR155/Flat Shoals Rd. Including Noise Barriers	
Plan Reference (Drawing No. or Station-Offset): 24-19 (SUE) / 24-025 (Construction)	PROJECT #: IMNHO-0285-01(354)

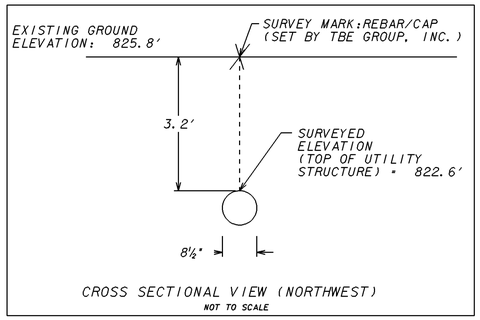

CROSS SECTIONAL VIEW (NORTHWEST)
NOT TO SCALE

Recorded Size/Material Type:
8" DIP WATER

Recorded Size/Material Type of Utility:
WAS FOUND

Remarks:
N/A

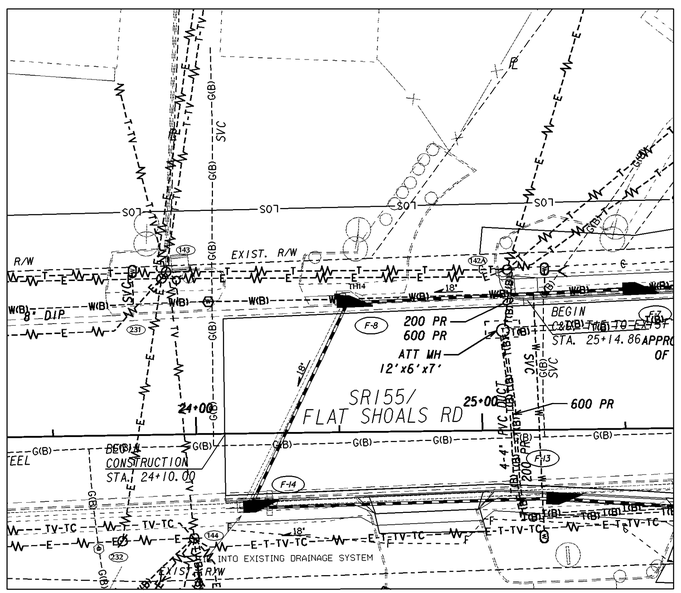

PLAN VIEW

LEGEND

TH	TEST HOLE (QL-A)
FO	FIBER OPTIC
UNK	UNKNOWN MATERIAL TYPE
PLAS.	PLASTIC
STL.	STEEL
A.C.	ASBESTOS CEMENT
C.I.	CAST IRON
D.I.	DUCTILE IRON
RCP	REINFORCED CONCRETE PIPE
MET.	METALLIC
PVC	POLYVINYL CHLORIDE
PR	PAIR
O.D.	OUTSIDE DIAMETER

TEST HOLE	UTILITY LOCATED	NORTHING	EASTING	STATION/OFFSET	GROUND ELEVATION (FEET)	ELEVATION OF UTILITY (FEET)	ACTUAL DEPTH (FEET)
14	8¾" DIP WATER	1344472.9	2267091.3	24+51 / 47' L	825.8	822.6	3.2

Vertical Datum: NAVD'88	Condition of Utility (Observed): GOOD	REVISIONS
Horizontal Datum: NAD'83 (94 HARN)	Field Condition: CLAY AND ROCKS	
Survey Control Provided By: GDOT	Proposed Conflict: CATCH BASIN F-8	

NOTES:
1. UTILITY DIMENSIONS OBTAINED FROM TEST HOLES ARE OUTSIDE DIAMETER UNLESS OTHERWISE NOTED.
2. THE ACTUAL DEPTHS OBTAINED FROM TEST HOLES ARE MEASURED NOT CALCULATED.

City, County, State: Decatur, Dekalb, Georgia	Test Hole # 15
General Location: SR 155/Flat Shoals Road South of I-285	Date: 01/24/14
Project ID #: 713290-	Recorded by: HJH
Project Description: I-285 at SR155/Flat Shoals Rd. Including Noise Barriers	
Plan Reference (Drawing No. or Station-Offset): 24-19 (SUE) / 24-025 (Construction)	PROJECT #: IMNHO-0285-01(354)

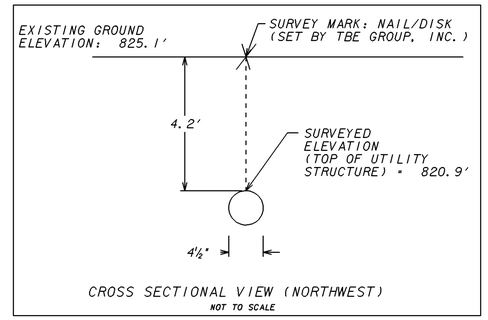

CROSS SECTIONAL VIEW (NORTHWEST)
NOT TO SCALE

Recorded Size/Material Type:
4" STEEL GAS

Recorded Size/Material Type of Utility:
WAS FOUND

Remarks:
N/A

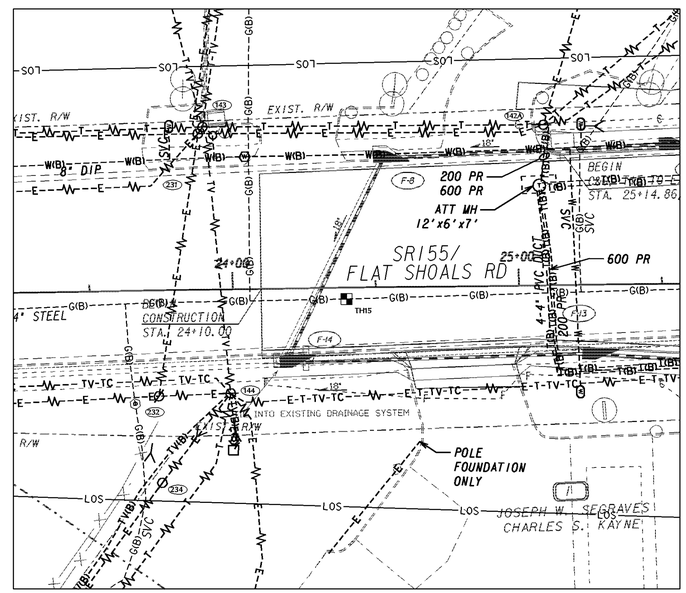

PLAN VIEW

LEGEND

TH	TEST HOLE (QL-A)
FO	FIBER OPTIC
UNK	UNKNOWN MATERIAL TYPE
PLAS.	PLASTIC
STL.	STEEL
A.C.	ASBESTOS CEMENT
C.I.	CAST IRON
D.I.	DUCTILE IRON
RCP	REINFORCED CONCRETE PIPE
MET.	METALLIC
PVC	POLYVINYL CHLORIDE
PR	PAIR
O.D.	OUTSIDE DIAMETER

TEST HOLE	UTILITY LOCATED	NORTHING	EASTING	STATION/OFFSET	GROUND ELEVATION (FEET)	TOP OF UTILITY ELEVATION (FEET)	ACTUAL DEPTH (FEET)
15	4¼" STEEL GAS	1344493.2	2267138.8	24+40 / 4' R	825.1	820.9	4.2

Vertical Datum: NAVD'88	Condition of Utility (Observed): GOOD	REVISIONS
Horizontal Datum: NAD'83 (94 HARN)	Field Condition: CLAY AND ROCKS	
Survey Control Provided By: GDOT	Proposed Conflict: 18" STORM DRAIN	

NOTES:
1. UTILITY DIMENSIONS OBTAINED FROM TEST HOLES ARE OUTSIDE DIAMETER UNLESS OTHERWISE NOTED.
2. THE ACTUAL DEPTHS OBTAINED FROM TEST HOLES ARE MEASURED NOT CALCULATED.

GEORGIA
DEPARTMENT OF TRANSPORTATION

REVISION DATES

STATE OF GEORGIA
DEPARTMENT OF TRANSPORTATION

OFFICE:

UTILITY PLANS

I-285 AT FLAT SHOALS ROAD
PI 713290 -

DRAWING No. 24-OL

1/5/2009 GPLN