5/7/2014	Wed May 07 14:46:12 2014	\\gdot-dsn1\gocfg\resources\Gdot-2012.tbl	m:\713290\dgn\713290UTOG.dgn	STATE	PROJECT NUMBER	SHEET NO.	TOTAL SHEETS
01006507				GA		413	995

City, County, State: Decatur, Dekalb, Georgia	Test Hole # 3
General Location: I-285 Eastbound Ramp 'A' West of Panthersville Road	Date: 02/19/14
Project ID #: 713290-	Recorded by: HJH
Project Description: I-285 at SR155/Flat Shoals Rd. Including Noise Barriers	
Plan Reference (Drawing No. or Station-Offset): 24-03 (SUE) / 24-007 (Construction)	PROJECT #: IMNHO-0285-01(354)

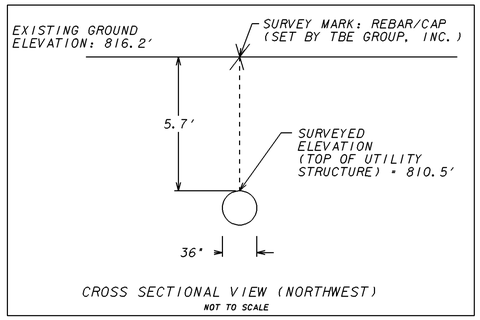

CROSS SECTIONAL VIEW (NORTHWEST)
NOT TO SCALE

Recorded Size/Material Type:
24" DIP WATER

Recorded Size/Material Type of Utility:
WAS NOT FOUND

Remarks:
A 36" STEEL CASING was found instead of recorded 24" DIP WATER. 24" DIP WATER assumed inside casing.

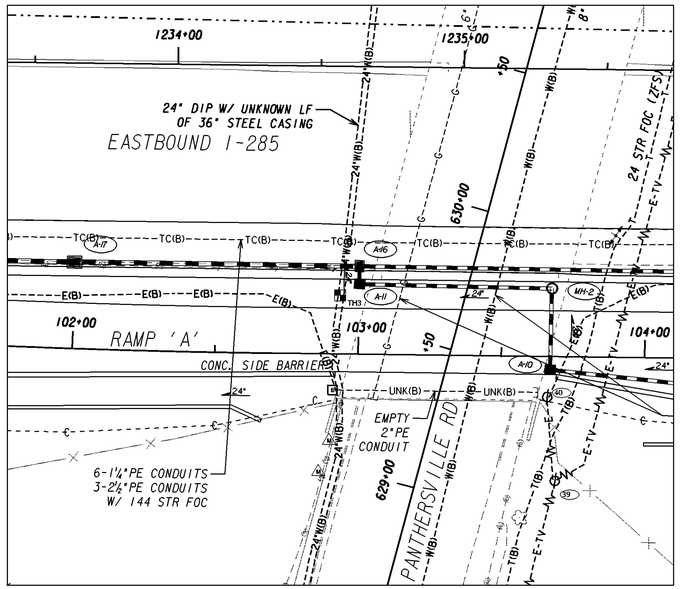

PLAN VIEW

LEGEND

TH	TEST HOLE (QL-A)
FO	FIBER OPTIC
UNK	UNKNOWN MATERIAL TYPE
PLAS.	PLASTIC
STL.	STEEL
A. C.	ASBESTOS CEMENT
C. I.	CAST IRON
D. I.	DUCTILE IRON
RCP	REINFORCED CONCRETE PIPE
MET.	METALLIC
PVC	POLYVINYL CHLORIDE
PR	PAIR
O. D.	OUTSIDE DIAMETER

TEST HOLE	UTILITY LOCATED	NORTHING	EASTING	STATION/OFFSET	GROUND ELEVATION (FEET)	ELEVATION OF UTILITY (FEET)	ACTUAL DEPTH (FEET)
3	36" STEEL CASING	1345465.2	2264826.1	1234+58 / 80' R	816.2	810.5	5.7

Vertical Datum: NAVD'88	Condition of Utility (Observed): N/A (UTILITY WAS NOT OBSERVED)	REVISIONS
Horizontal Datum: NAD'83 (94 HARN)	Field Condition: NATURAL GROUND, SUNNY	
Survey Control Provided By: GDOT	Proposed Conflict: CONCRETE SIDE BARRIER	

NOTES:
1. UTILITY DIMENSIONS OBTAINED FROM TEST HOLES ARE OUTSIDE DIAMETER UNLESS OTHERWISE NOTED.
2. THE ACTUAL DEPTHS OBTAINED FROM TEST HOLES ARE MEASURED NOT CALCULATED.

City, County, State: Decatur, Dekalb, Georgia	Test Hole # 4
General Location: I-285 Westbound Ramp 'B' West of Panthersville Road	Date: 2/19/14
Project ID #: 713290-	Recorded by: HJH
Project Description: I-285 at SR155/Flat Shoals Rd. Including Noise Barriers	
Plan Reference (Drawing No. or Station-Offset): 24-08 (SUE) / 24-012 (Construction)	PROJECT #: IMNHO-0285-01(354)

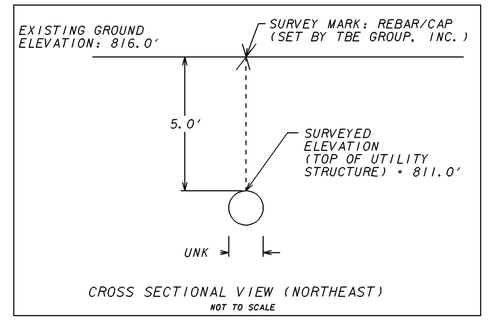

CROSS SECTIONAL VIEW (NORTHEAST)
NOT TO SCALE

Recorded Size/Material Type:
24" DIP WATER

Recorded Size/Material Type of Utility:
WAS FOUND

Remarks:
Only exposed a portion of the DIP WATER. Unable to verify pipe diameter due to concrete in the test hole.

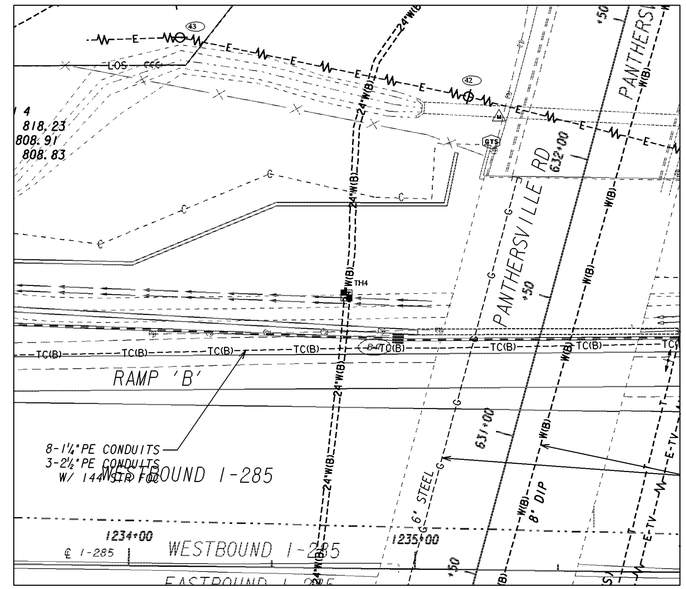

PLAN VIEW

LEGEND

TH	TEST HOLE (QL-A)
FO	FIBER OPTIC
UNK	UNKNOWN MATERIAL TYPE
PLAS.	PLASTIC
STL.	STEEL
A. C.	ASBESTOS CEMENT
C. I.	CAST IRON
D. I.	DUCTILE IRON
RCP	REINFORCED CONCRETE PIPE
MET.	METALLIC
PVC	POLYVINYL CHLORIDE
PR	PAIR
O. D.	OUTSIDE DIAMETER

TEST HOLE	UTILITY LOCATED	NORTHING	EASTING	STATION/OFFSET	GROUND ELEVATION (FEET)	ELEVATION OF UTILITY (FEET)	ACTUAL DEPTH (FEET)
4	UNKNOWN SIZE DIP WATER	1345640.3	2264845.7	1234+75 / 95' L	816.0	811.0	5.0

Vertical Datum: NAVD'88	Condition of Utility (Observed): GOOD	REVISIONS
Horizontal Datum: NAD'83 (94 HARN)	Field Condition: NATURAL GROUND	
Survey Control Provided By: GDOT	Proposed Conflict: DITCH	

NOTES:
1. UTILITY DIMENSIONS OBTAINED FROM TEST HOLES ARE OUTSIDE DIAMETER UNLESS OTHERWISE NOTED.
2. THE ACTUAL DEPTHS OBTAINED FROM TEST HOLES ARE MEASURED NOT CALCULATED.

GEORGIA
DEPARTMENT OF TRANSPORTATION

REVISION DATES

STATE OF GEORGIA
DEPARTMENT OF TRANSPORTATION

OFFICE:

UTILITY PLANS

I-285 AT FLAT SHOALS ROAD
PI 713290 -

DRAWING NO.
24-OG

1/5/2009 GPLN