8/21/2014 Thu Aug 21 16:34:41 2014	\\gdot-dsnl\gocfg\resources\Gdot-2012.tbl	m:\UD7\713290\DGN\713290DPN4.dgn	STATE	PROJECT NUMBER	SHEET NO.	TOTAL SHEETS
tmcdonald			GA	IMNHO-0285-01(354)	310	995

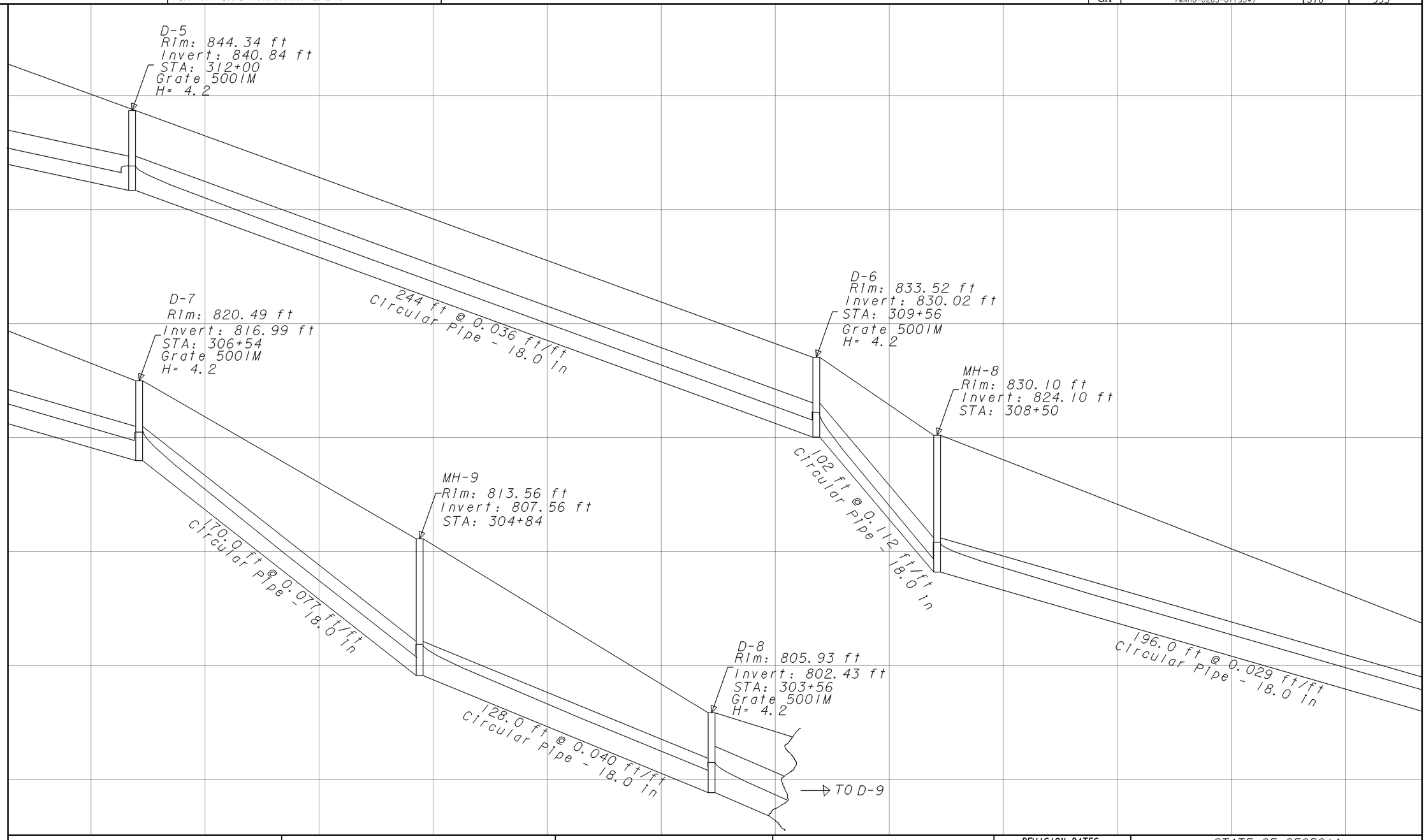

GEORGIA
DEPARTMENT OF TRANSPORTATION

SCALE IN FEET
0 20 40 80

REVISION DATES		
8-8-14		

STATE OF GEORGIA
DEPARTMENT OF TRANSPORTATION
OFFICE: ROADWAY DESIGN

DRAINAGE PROFILES

I-285 WB EXIT RAMP "D"

DRAWING No. 22-016

1/5/2009 GPLN