STATE	PROJECT NUMBER	SHEET NO.	TOTAL SHEETS
GA	IMNHO-0285-01(354)	305	995

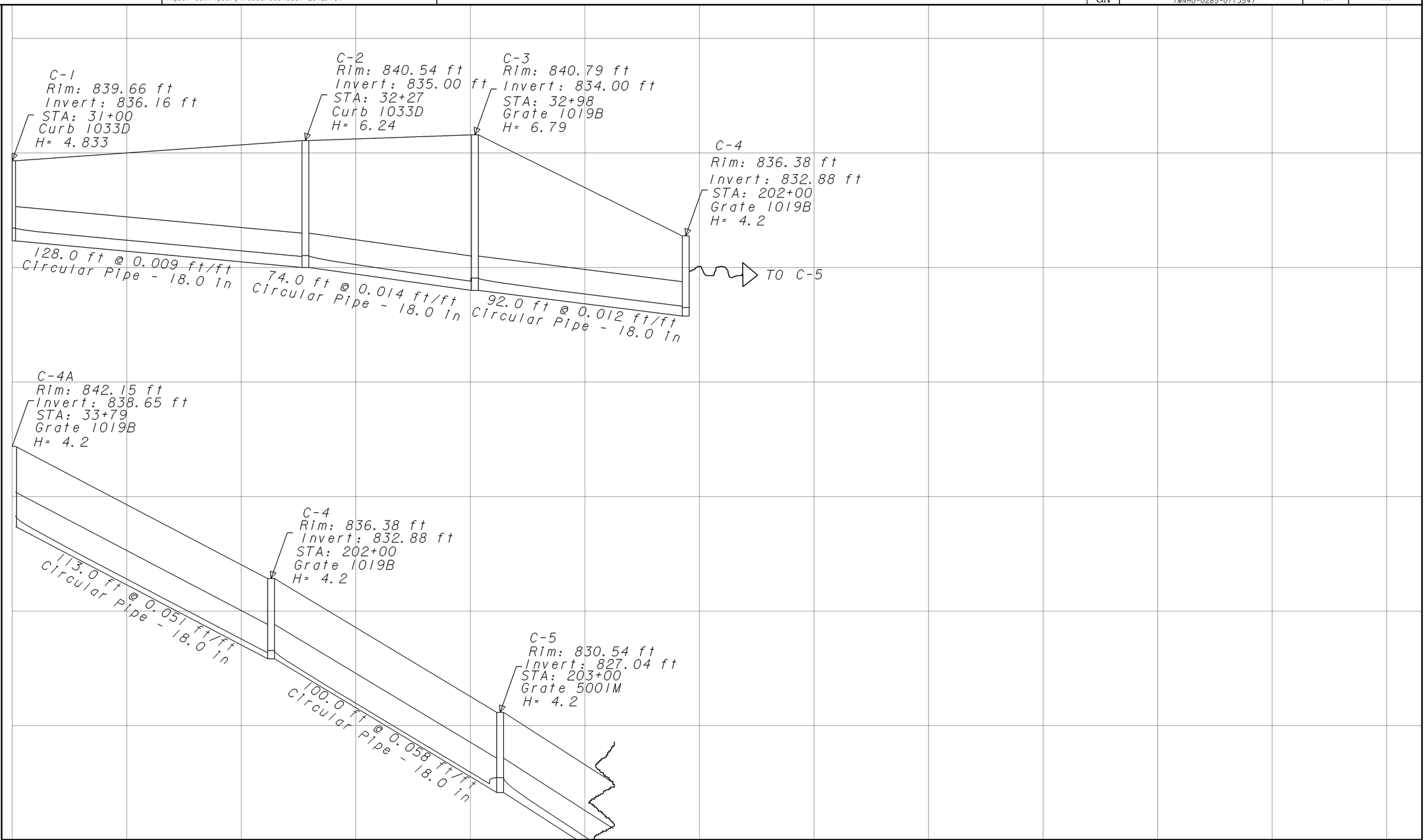

GEORGIA
DEPARTMENT OF TRANSPORTATION

SCALE IN FEET
0 20 40 80

REVISION DATES

STATE OF GEORGIA
DEPARTMENT OF TRANSPORTATION
OFFICE: ROADWAY DESIGN

DRAINAGE PROFILES

I-285 EB ENTRANCE RAMP "C"

DRAWING No. 22-011

1/5/2009 GPLN