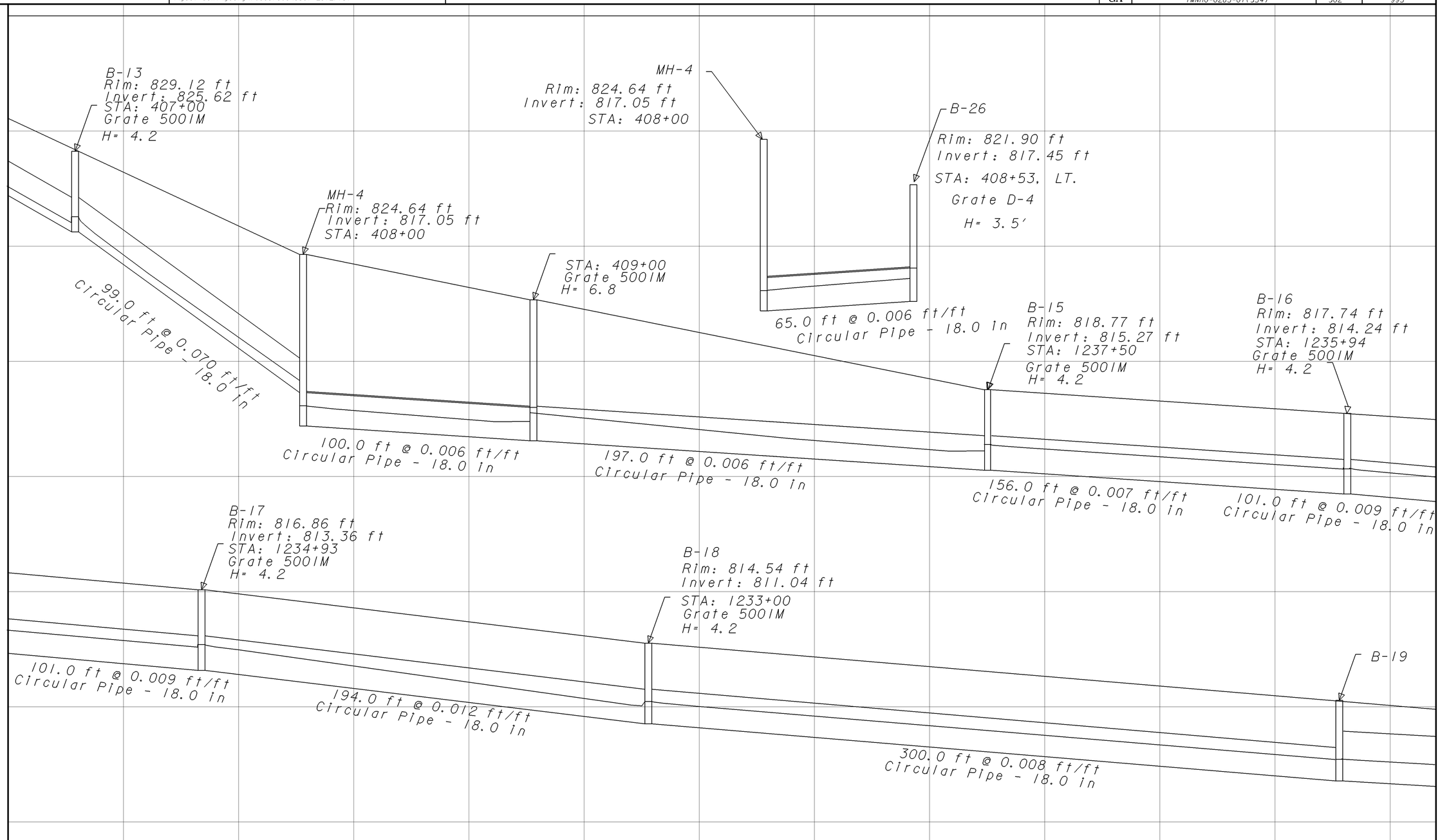

GEORGIA
DEPARTMENT OF TRANSPORTATION

SCALE IN FEET
0 20 40 80

REVISION DATES		
9/12/2014		

STATE OF GEORGIA
DEPARTMENT OF TRANSPORTATION

OFFICE: ROADWAY DESIGN

DRAINAGE PROFILES

I-285 ENTRANCE RAMP "B"

DRAWING No. 22-008

1/5/2009 GPLN