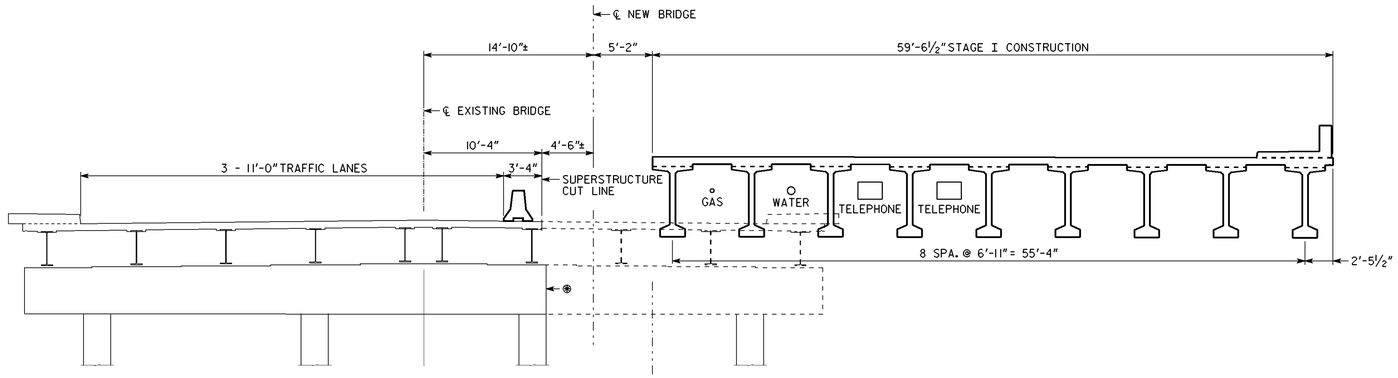

STAGE I
(LOOKING AHEAD)

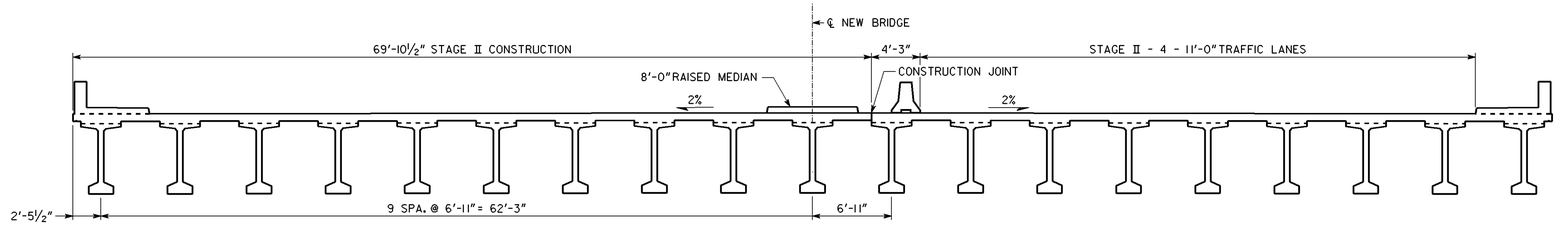

STAGE II
(LOOKING AHEAD)

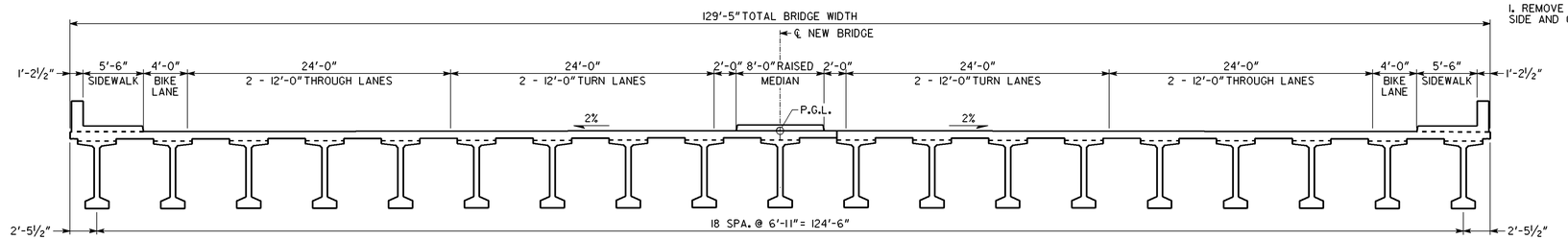

STAGE III
(LOOKING AHEAD)

CONSTRUCTION SEQUENCE

STAGE I

1. PLACE 2'-6" TEMPORARY BARRIER (METHOD 2) AS SHOWN AND REMOVE PORTIONS OF EXISTING SUPERSTRUCTURE AND SUBSTRUCTURE AS SHOWN. MAINTAIN TRAFFIC ON REMAINING PORTION OF THE EXISTING BRIDGE PROVIDING 3- 11'-0" TRAVEL LANES.

2. CONSTRUCT STAGE I OF THE NEW BRIDGE PROVIDING ONE SIDEWALK, 2'-0" SHOULDERS, AND 4- 11'-0" TRAVEL LANES. RELOCATE UTILITIES TO THE NEW BRIDGE AS SHOWN.

STAGE II

1. RELOCATE 2'-6" TEMPORARY BARRIER (METHOD 2) AND TRAFFIC TO NEW BRIDGE PORTION AS SHOWN AND REMOVE REMAINDER OF THE EXISTING BRIDGE, INCLUDING SUBSTRUCTURE.

2. CONSTRUCT REMAINDER OF THE NEW BRIDGE INCLUDING ONE SIDEWALK, THE 4'-0" BIKE LANE AND THE 8'-0" RAISED MEDIAN.

STAGE III

1. REMOVE TEMPORARY BARRIER, STRIPE 4'-0" BIKE LANE ON RIGHT SIDE AND OPEN ENTIRE NEW BRIDGE TO TRAFFIC.

BRIDGE NO. 1

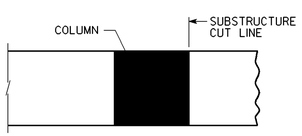

⊕ CUT LINE FOR SUBSTRUCTURE SHALL BE AT COLUMN FACE SHOWN FOR INTERMEDIATE BENTS 2, 3, & 4.

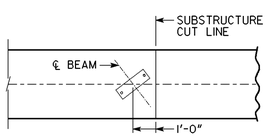

⊕ CUT LINE FOR END BENTS SHALL BE 1'-0" RIGHT OF BEAM 7, AS SHOWN.

NOT TO SCALE

REVISION DATES		

GEORGIA
DEPARTMENT OF TRANSPORTATION

STATE OF GEORGIA
DEPARTMENT OF TRANSPORTATION
OFFICE: ROADWAY DESIGN

STAGING NOTES
BRIDGE SEQUENCE

DRAWING No. 19-001

1/5/2009 GQUANT