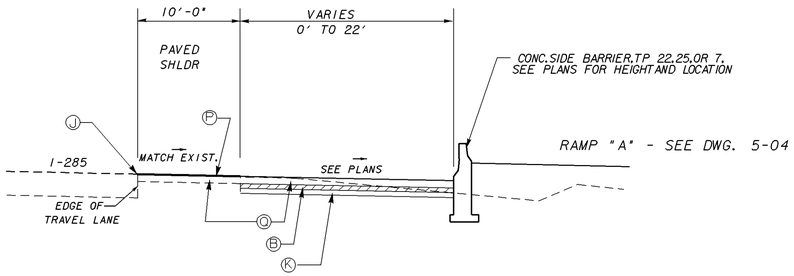


T. S. NO. 15

I-285 STA. 1231+62.39 TO STA. 1239+77.00, RT.

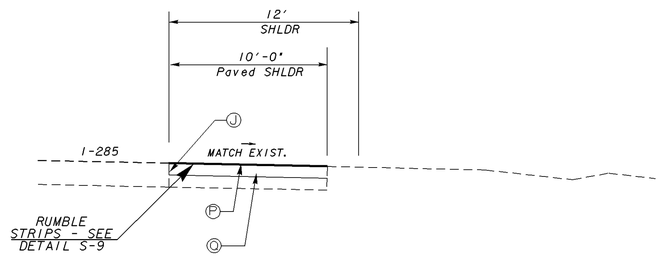


T. S. NO. 16

I-285 STA. 1239+77.00 TO STA. 1259+20.12, RT.
& STA. 1242+00.00 TO STA. 1260+00.00, LT.

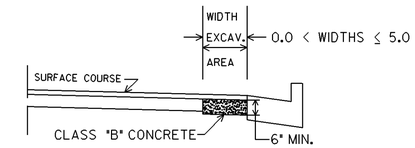


NO SCALE
CLASS "B" CONCRETE BASE OR PAVEMENT WIDENING
Item Code 500-9999 - Cu. Yds.

In excavated areas between the existing paving and new curb and gutter that are 5'-0" or less in width, Class "B" concrete shall be placed in lieu of the base and paving specified by the typical section. Payment will be made under "Class B Concrete Base and Pavement Widening".
In excavated areas greater than 5'-0" in width, the Contractor shall place base and paving as specified on the typical section.
See plans for details of curb and gutter construction.

CLASS "B" CONCRETE BASE OR WIDENING DETAIL

## ALLOWABLE RANGES TABLE

FOR THIS PROJECT, CROSS SLOPES THAT ARE ADJUSTED TO "BEST FIT" EXISTING PAVEMENT SLOPES ARE SUBJECT TO THE FOLLOWING LIMITS:

A. NORMAL CROWN

| SECTION WITH GRADES 0.5% OR GREATER | SECTION WITH GRADES LESS THAN 0.5% |
|---|---|
| 0.0150 FT/FT - MINIMUM | 0.0156 FT/FT - MINIMUM |
| 0.0208 FT/FT - DESIRABLE | 0.0208 FT/FT - DESIRABLE |
| 0.0250 FT/FT - MAXIMUM | 0.0300 FT/FT - MAXIMUM |

B. SUPERELEVATION RATE

S.E. RATE SHOWN ON PLANS OR SE RATE EXISTING IN FIELD, WHICHEVER IS GREATER.

C. SUPERELEVATION TRANSITION LENGTH (LENGTH FROM FLAT POINT TO FULL SE)

| | RATE OF CHANGE | CORRESPONDING DIFFERENCE IN GRADE BETWEEN PIVOT POINT AND EDGE OF PAVEMENT |
|---|---|---|
| MINIMUM | 1:150 | 0.67% |
| DESIRABLE | 1:200 | 0.50% |
| MAXIMUM | 1:300 | 0.33% |

LENGTH SHALL BE SET TO AVOID CREATING A FLAT GUTTER GRADE ON LOW SIDE AND TO AVOID FLAT CROSS SLOPES AT OR NEAR THE LOW POINT OF VERTICAL CURVES.

D. POSITIONING OF SUPERELEVATION TRANSITION LENGTH ON SIMPLE CURVES

50% OF TRANSITION INSIDE CURVE - MAXIMUM
33% OF TRANSITION INSIDE CURVE - DESIRABLE
20% OF TRANSITION INSIDE CURVE - MINIMUM

NOTE: CROWN WIPE-OUT SHALL BE AT THE SAME RATE AS THE SE TRANSITION.

E. SMOOTHING OF BREAKS IN EDGE PROFILE AT BEGIN AND END OF TRANSITION SHALL BE ACCOMPLISHED BY VERTICAL CURVE WITH A MINIMUM LENGTH (IN FEET) EQUAL TO THE SPEED DESIGN (IN MPH).

TYPICAL SECTION DETAIL TO BE USED WHEN EXISTING PAVEMENT IS TO BE RESURFACED WITH TWO INCHES OR MORE OF ASPHALTIC CONCRETE

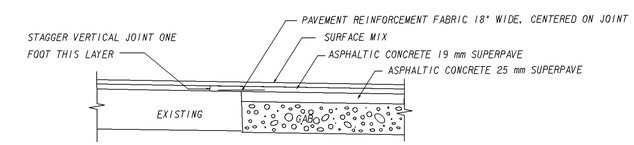


TYPICAL SECTION DETAIL TO BE USED WHEN EXISTING PAVEMENT IS TO BE RESURFACED WITH LESS THAN TWO INCHES OF ASPHALTIC CONCRETE

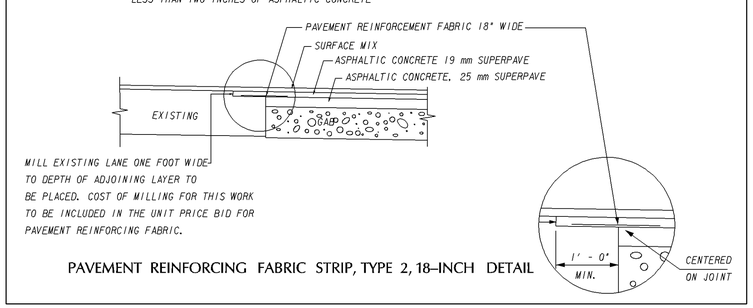


PAVEMENT REINFORCING FABRIC STRIP, TYPE 2, 18-INCH DETAIL

## PAVEMENT MATERIAL SCHEDULE

| | | | |
|---|---|---|---|
| A | RECYCLED ASPH CONC 12.5 mm, SUPERPAVE, POLYMER-MODIFIED, GP 2 ONLY, INCL BITUM MAT'L & H. LIME, 165 lb/sq yd. | I | RECYCLED ASPH CONC 19 mm, SUPERPAVE, GP 1 OR 2, INCL BITUM MAT'L & H. LIME, 220 lb/sq yd. |
| B | RECYCLED ASPH CONC 19 mm, SUPERPAVE, GP 1 OR 2, INCL BITUM MAT'L & H. LIME, 330 lb/sq yd. | J | PAVMT REINF FABRIC STRIPS, TP 2, 18 INCH |
| C | RECYCLED ASPH CONC 25 mm, SUPERPAVE, GP 1 OR 2, INCL BITUM MAT'L & H. LIME, 440 lb/sq yd. | K | GRADED AGGREGATE BASE COURSE, 6 INCH |
| D | GRADED AGGREGATE BASE COURSE, 12 INCH | L | CONC. MEDIAN, 4 INCH THK |
| E | CONC. CURB & GUTTER, 8" x 30", TP 7 | M | GRADED AGGREGATE BASE COURSE, 14 INCH |
| F | CONC. CURB & GUTTER, 8" x 30", TP 2 | N | 7.5" CONC. MEDIAN W/TP 7 FACE |
| G | RECYCLED ASPH CONC 25 mm, SUPERPAVE, GP 1 OR 2, INCL BITUM MAT'L & H. LIME, 330 lb/sq yd. | O | 6" CONC. MEDIAN W/TP 7 FACE |
| H | PLAIN PC CONC PVMT, CL 3 CONC, 9 INCH THK | P | MILL ASPH CONC PVMT, 1½IN DEPTH |
| | | Q | RECYCLED ASPH CONC 12.5 mm, SUPERPAVE, GP 2 ONLY, INCL BITUM MAT'L & H. LIME, 165 lb/sq yd. |

| SLOPE CONTROLS* | | |
|---|---|---|
| SLOPE | CUT | FILL |
| 4:1 | —— | 0-10' |
| 2:1 | ALL | OVER 10' |

*X-SECTS SUPERCEED SLOPE CONTROL BOX

**GEORGIA**
**DEPARTMENT OF TRANSPORTATION**

NOT TO SCALE

| REVISION DATES | | |
|---|---|---|
| 8/8/14 | | |

STATE OF GEORGIA
DEPARTMENT OF TRANSPORTATION
OFFICE: ROADWAY DESIGN

# TYPICAL SECTIONS

I-285 AT SR155/FLAT SHOALS

DRAWING No. 5-10

1/5/2009 GPLN