5/8/2014 Thu May 08 05:09:44 2014 pmagoon	\\gdot-dsnl\gocfg\resources\Gdot-2012.tbl	m:\713290\DGN\713290TY08.dgn	STATE	PROJECT NUMBER	SHEET NO.	TOTAL SHEETS
			GA	IMNHO-0285-01(354)	18	995

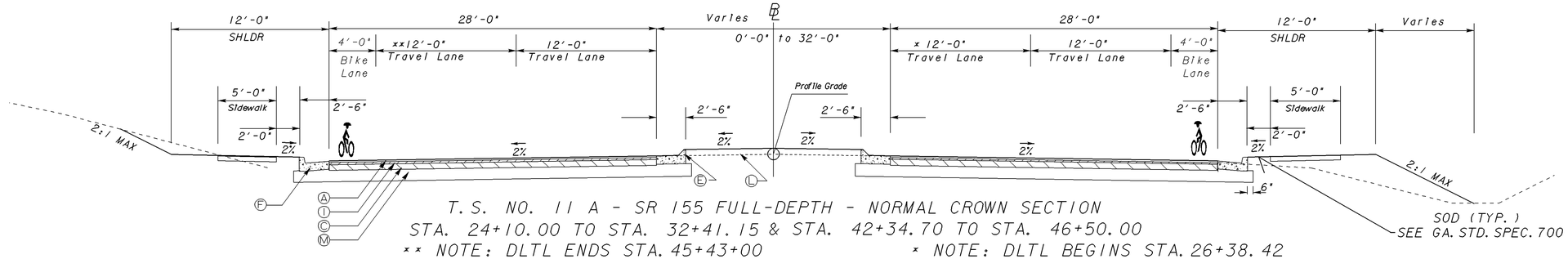

T. S. NO. 11 A - SR 155 FULL-DEPTH - NORMAL CROWN SECTION
STA. 24+10.00 TO STA. 32+41.15 & STA. 42+34.70 TO STA. 46+50.00
xx NOTE: DLTL ENDS STA. 45+43+00 x NOTE: DLTL BEGINS STA. 26+38.42

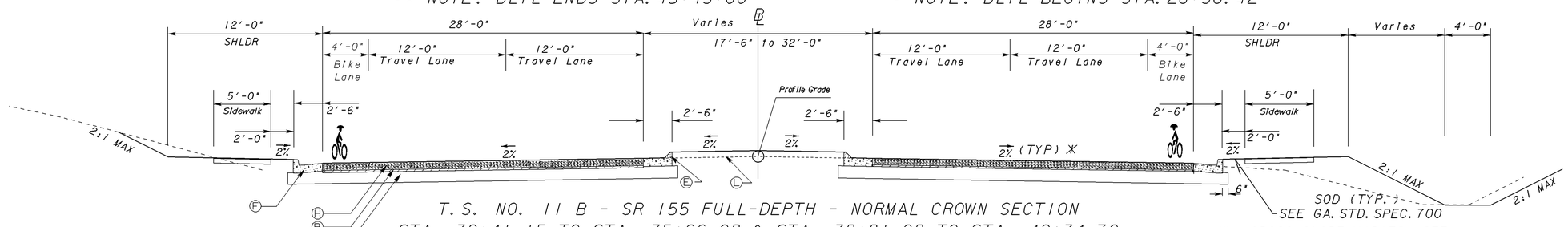

T. S. NO. 11 B - SR 155 FULL-DEPTH - NORMAL CROWN SECTION
STA. 32+41.15 TO STA. 35+66.08 & STA. 38+81.08 TO STA. 42+34.70

X - CROSS-SLOPE VARIES, SEE PLANS FOR TRANSITION LOCATIONS

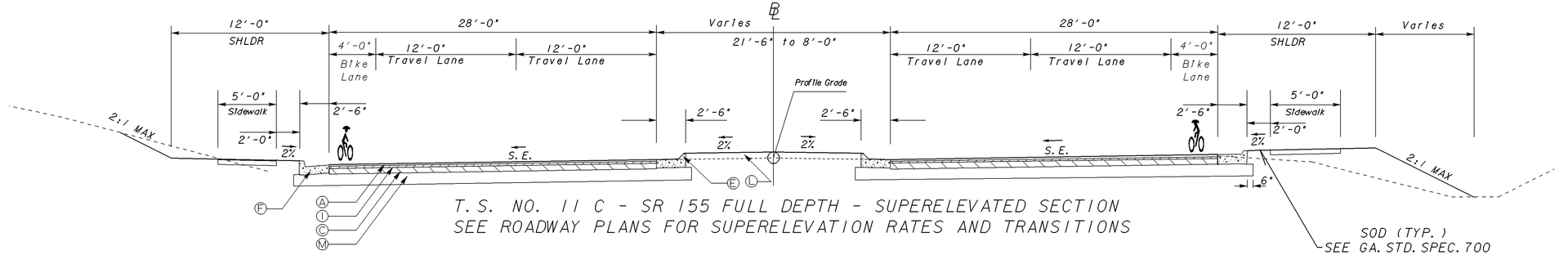

T. S. NO. 11 C - SR 155 FULL DEPTH - SUPERELEVATED SECTION
SEE ROADWAY PLANS FOR SUPERELEVATION RATES AND TRANSITIONS

PAVEMENT MATERIAL SCHEDULE

A	RECYCLED ASPH CONC 12.5 mm, SUPERPAVE, POLYMER-MODIFIED, GP 2 ONLY, INCL BITUM MAT'L & H. LIME, 165 lb/sq yd.	I	RECYCLED ASPH CONC 19 mm, SUPERPAVE, GP 1 OR 2, INCL BITUM MAT'L & H. LIME, 220 lb/sq yd.
B	RECYCLED ASPH CONC 19 mm, SUPERPAVE, GP 1 OR 2, INCL BITUM MAT'L & H. LIME, 330 lb/sq yd.	J	PAVMT REINF FABRIC STRIPS, TP 2, 18 INCH
C	RECYCLED ASPH CONC 25 mm, SUPERPAVE, GP 1 OR 2, INCL BITUM MAT'L & H. LIME, 440 lb/sq yd.	K	GRADED AGGREGATE BASE COURSE, 6 INCH
D	GRADED AGGREGATE BASE COURSE, 12 INCH	L	CONC. MEDIAN, 4 INCH THK
E	CONC. CURB & GUTTER, 8" x 30", TP 7	M	GRADED AGGREGATE BASE COURSE, 14 INCH
F	CONC. CURB & GUTTER, 8" x 30", TP 2	N	7.5" CONC. MEDIAN W/TP 7 FACE
G	RECYCLED ASPH CONC 25 mm, SUPERPAVE, GP 1 OR 2, INCL BITUM MAT'L & H. LIME, 330 lb/sq yd.	O	6" CONC. MEDIAN W/TP 7 FACE
H	PLAIN PC CONC PVMT, CL 3 CONC, 9 INCH THK	P	MILL ASPH CONC PVMT, 1½IN DEPTH
		Q	RECYCLED ASPH CONC 12.5 mm, SUPERPAVE, GP 2 ONLY, INCL BITUM MAT'L & H. LIME, 165 lb/sq yd.

SLOPE CONTROLS*		
SLOPE	CUT	FILL
4:1	——	0-10'
2:1	ALL	OVER 10'

*X-SECTS SUPERCEED SLOPE CONTROL BOX

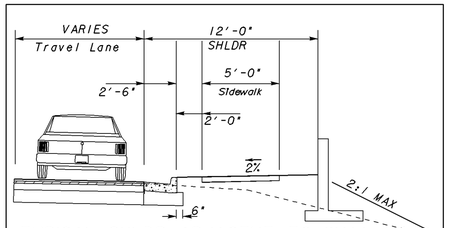

TYPICAL SHLDR ADJACENT TO WALL
SEE GA. STD. DETAIL P-1

GEORGIA
DEPARTMENT OF TRANSPORTATION

NOT TO SCALE

REVISION DATES

STATE OF GEORGIA
DEPARTMENT OF TRANSPORTATION
OFFICE: ROADWAY DESIGN

TYPICAL SECTIONS

I-285 AT SR155/FLAT SHOALS

DRAWING No. 5-08

1/5/2009 GPLN