5/8/2014 5:09:39 AM \\GDOT-DSNI\GOPLOT\QCF\QGC.qcf pmagoon M:\713290\DGN\713290TY07.prf

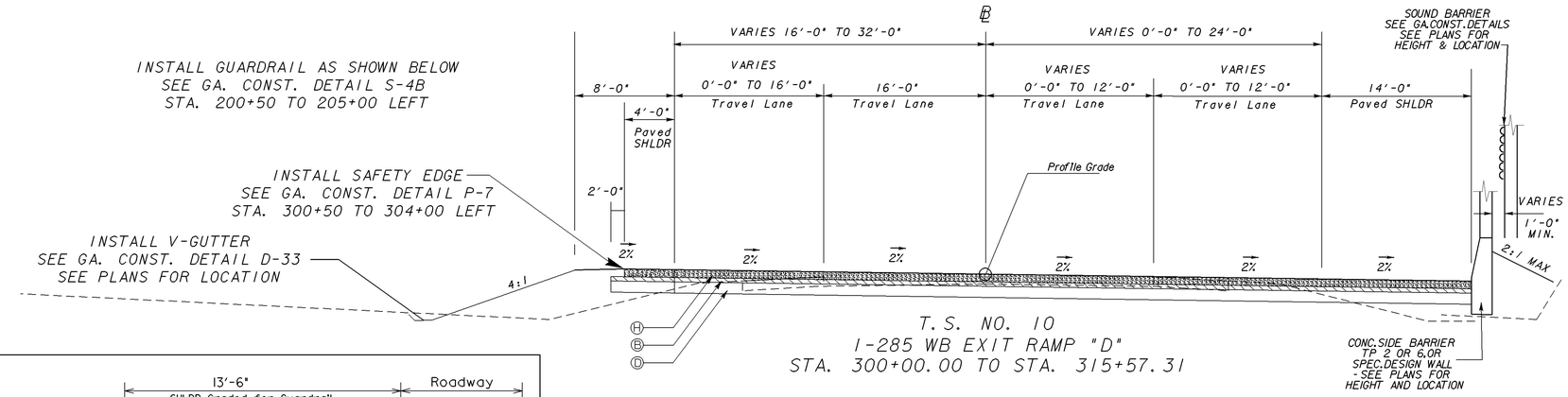

T. S. NO. 10
I-285 WB EXIT RAMP "D"
STA. 300+00.00 TO STA. 315+57.31

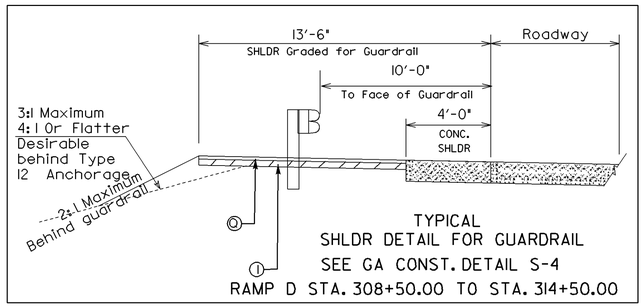

TYPICAL
SHLDR DETAIL FOR GUARDRAIL
SEE GA CONST. DETAIL S-4
RAMP D STA. 308+50.00 TO STA. 314+50.00

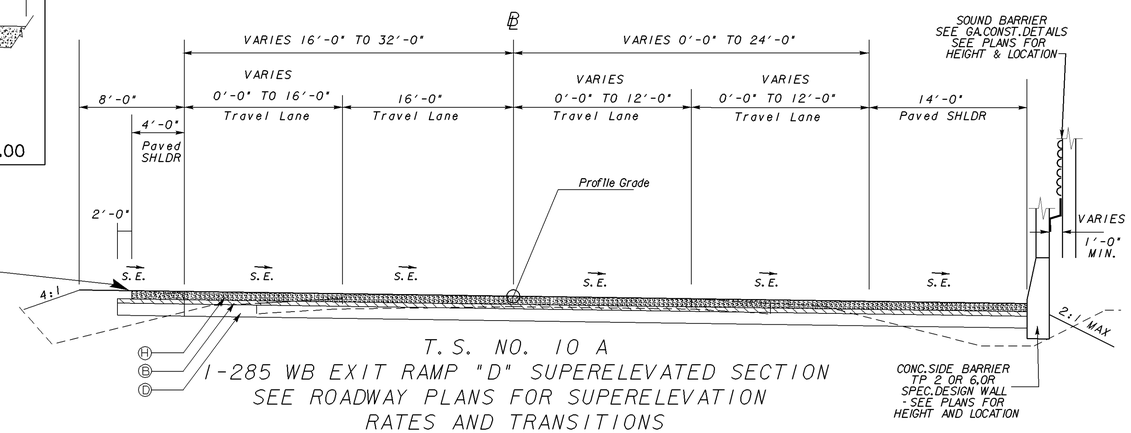

T. S. NO. 10 A
I-285 WB EXIT RAMP "D" SUPERELEVATED SECTION
SEE ROADWAY PLANS FOR SUPERELEVATION
RATES AND TRANSITIONS

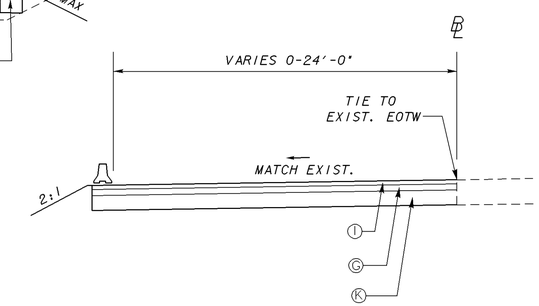

T. S. NO. 12 - TEMPORARY PAVEMENT
RAMP "A" STA. 115+00.00 TO STA. 118+50.00
RAMP "D" STA. 313+35.60 TO STA. 315+41.50

PAVEMENT MATERIAL SCHEDULE

A	RECYCLED ASPH CONC 12.5 mm, SUPERPAVE, POLYMER-MODIFIED, GP 2 ONLY, INCL BITUM MAT'L & H. LIME, 165 lb/sq yd.	I	RECYCLED ASPH CONC 19 mm, SUPERPAVE, GP 1 OR 2, INCL BITUM MAT'L & H. LIME, 220 lb/sq yd.
B	RECYCLED ASPH CONC 19 mm, SUPERPAVE, GP 1 OR 2, INCL BITUM MAT'L & H. LIME, 330 lb/sq yd.	J	PAVMT REINF FABRIC STRIPS, TP 2, 18 INCH
C	RECYCLED ASPH CONC 25 mm, SUPERPAVE, GP 1 OR 2, INCL BITUM MAT'L & H. LIME, 440 lb/sq yd.	K	GRADED AGGREGATE BASE COURSE, 6 INCH
D	GRADED AGGREGATE BASE COURSE, 12 INCH	L	CONC. MEDIAN, 4 INCH THK
E	CONC. CURB & GUTTER, 8" x 30", TP 7	M	GRADED AGGREGATE BASE COURSE, 14 INCH
F	CONC. CURB & GUTTER, 8" x 30", TP 2	N	7.5" CONC. MEDIAN W/TP 7 FACE
G	RECYCLED ASPH CONC 25 mm, SUPERPAVE, GP 1 OR 2, INCL BITUM MAT'L & H. LIME, 330 lb/sq yd.	O	6" CONC. MEDIAN W/TP 7 FACE
H	PLAIN PC CONC PVMT, CL 3 CONC, 9 INCH THK	P	MILL ASPH CONC PVMT, 1½IN DEPTH
		Q	RECYCLED ASPH CONC 12.5 mm, SUPERPAVE, GP 2 ONLY, INCL BITUM MAT'L & H. LIME, 165 lb/sq yd.

SLOPE CONTROLS*		
SLOPE	CUT	FILL
4:1	——	0-10'
2:1	ALL	OVER 10'

*X-SECTS SUPERCEED SLOPE CONTROL BOX

GEORGIA
DEPARTMENT OF TRANSPORTATION

NOT TO SCALE

REVISION DATES

STATE OF GEORGIA
DEPARTMENT OF TRANSPORTATION
OFFICE: ROADWAY DESIGN

TYPICAL SECTIONS

I-285 AT SR155/FLAT SHOALS

DRAWING No. 5-07

1/5/2009 GPLN

5/8/2014 5:09:39 AM \\GDOT-DSNI\GOPLOT\QCF\QGC.qcf pmagoon M:\713290\DGN\713290TY07.prf