INSTALL GUARDRAIL AS SHOWN BELOW
SEE GA. CONST. DETAIL S-4
STA. 110+58 TO 118+75 LEFT

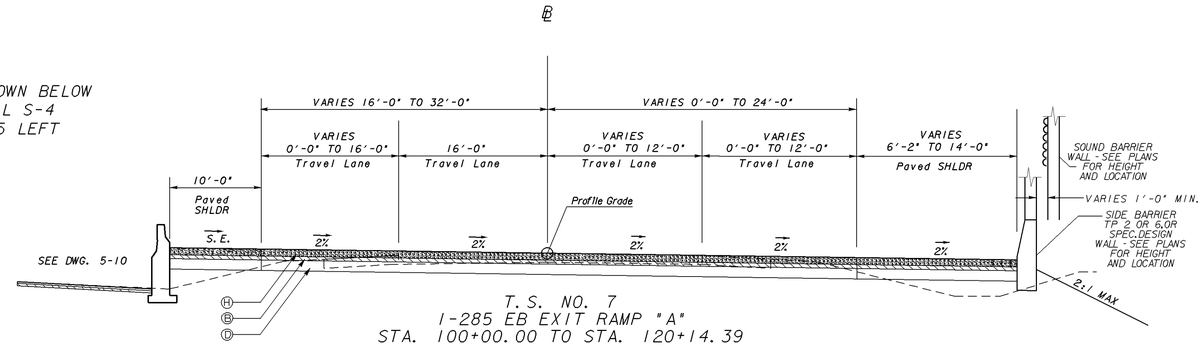

T.S. NO. 7
I-285 EB EXIT RAMP "A"
STA. 100+00.00 TO STA. 120+14.39

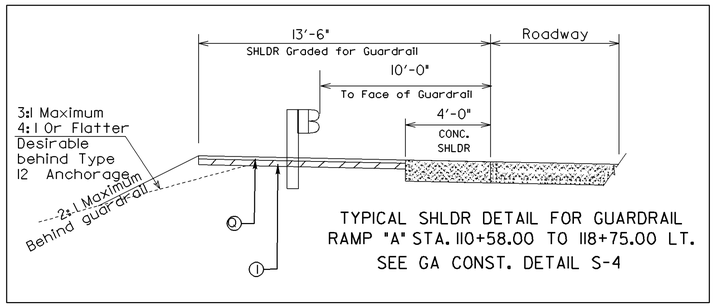

TYPICAL SHLDR DETAIL FOR GUARDRAIL
RAMP "A" STA. 110+58.00 TO 118+75.00 LT.
SEE GA CONST. DETAIL S-4

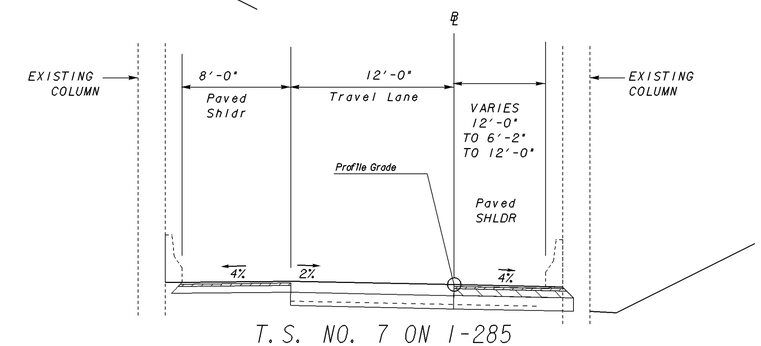

T.S. NO. 7 ON I-285
I-285 EB EXIT RAMP "A"
STA. 1232+14 TO STA. 1235+85

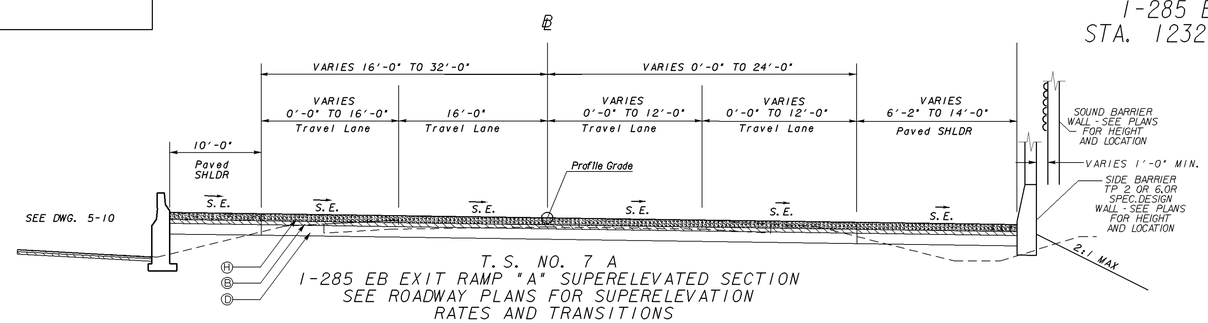

T.S. NO. 7 A
I-285 EB EXIT RAMP "A" SUPERELEVATED SECTION
SEE ROADWAY PLANS FOR SUPERELEVATION
RATES AND TRANSITIONS

PAVEMENT MATERIAL SCHEDULE

A	RECYCLED ASPH CONC 12.5 mm, SUPERPAVE, POLYMER-MODIFIED, GP 2 ONLY, INCL BITUM MAT'L & H. LIME, 165 lb/sq yd.	I	RECYCLED ASPH CONC 19 mm, SUPERPAVE, GP 1 OR 2, INCL BITUM MAT'L & H. LIME, 220 lb/sq yd.
B	RECYCLED ASPH CONC 19 mm, SUPERPAVE, GP 1 OR 2, INCL BITUM MAT'L & H. LIME, 330 lb/sq yd.	J	PAVMT REINF FABRIC STRIPS, TP 2, 18 INCH
C	RECYCLED ASPH CONC 25 mm, SUPERPAVE, GP 1 OR 2, INCL BITUM MAT'L & H. LIME, 440 lb/sq yd.	K	GRADED AGGREGATE BASE COURSE, 6 INCH
D	GRADED AGGREGATE BASE COURSE, 12 INCH	L	CONC. MEDIAN, 4 INCH THK
E	CONC. CURB & GUTTER, 8" x 30", TP 7	M	GRADED AGGREGATE BASE COURSE, 14 INCH
F	CONC. CURB & GUTTER, 8" x 30", TP 2	N	7.5" CONC. MEDIAN W/TP 7 FACE
G	RECYCLED ASPH CONC 25 mm, SUPERPAVE, GP 1 OR 2, INCL BITUM MAT'L & H. LIME, 330 lb/sq yd.	O	6" CONC. MEDIAN W/TP 7 FACE
H	PLAIN PC CONC PVMT, CL 3 CONC, 9 INCH THK	P	MILL ASPH CONC PVMT, 1½IN DEPTH
		Q	RECYCLED ASPH CONC 12.5 mm, SUPERPAVE, GP 2 ONLY, INCL BITUM MAT'L & H. LIME, 165 lb/sq yd.

SLOPE CONTROLS*		
SLOPE	CUT	FILL
4:1	——	0-10'
2:1	ALL	OVER 10'

*X-SECTS SUPERCEED SLOPE CONTROL BOX

GEORGIA
DEPARTMENT
OF
TRANSPORTATION

NOT TO SCALE

REVISION DATES

STATE OF GEORGIA
DEPARTMENT OF TRANSPORTATION
OFFICE: ROADWAY DESIGN
TYPICAL SECTIONS
I-285 AT SR155/FLAT SHOALS
DRAWING No. 5-04

1/5/2009 GPLN