STATE	PROJECT NUMBER	SHEET NO.	TOTAL SHEETS
GA	IMNHO-0285-01(354)	13	995

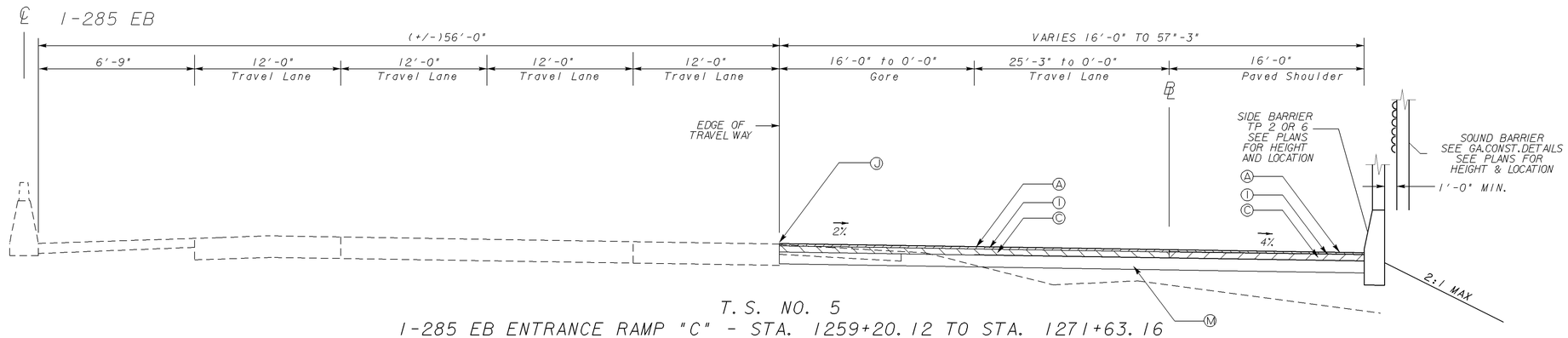

T.S. NO. 5
I-285 EB ENTRANCE RAMP "C" - STA. 1259+20.12 TO STA. 1271+63.16

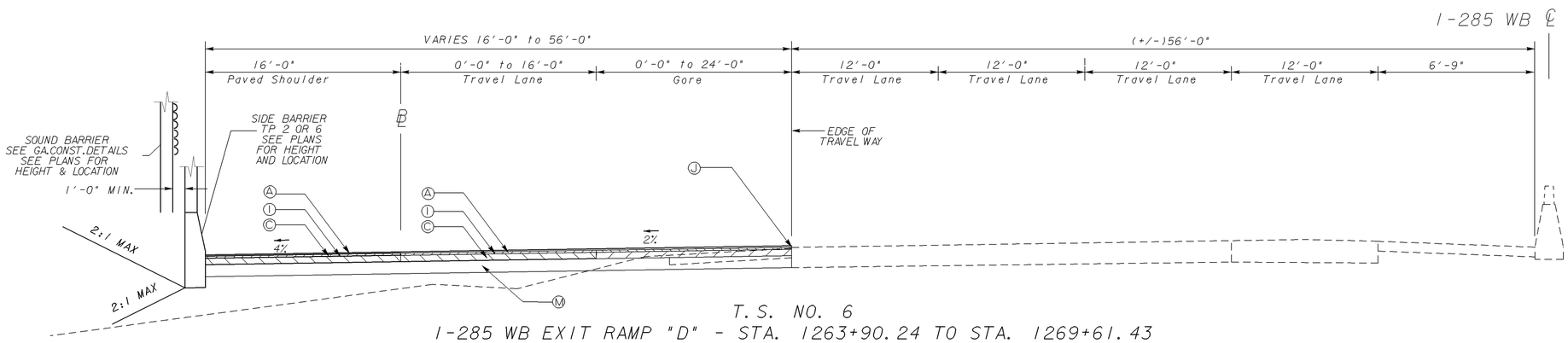

T.S. NO. 6
I-285 WB EXIT RAMP "D" - STA. 1263+90.24 TO STA. 1269+61.43

PAVEMENT MATERIAL SCHEDULE

A	RECYCLED ASPH CONC 12.5 mm, SUPERPAVE, POLYMER-MODIFIED, GP 2 ONLY, INCL BITUM MAT'L & H. LIME, 165 lb/sq yd.	I	RECYCLED ASPH CONC 19 mm, SUPERPAVE, GP 1 OR 2, INCL BITUM MAT'L & H. LIME, 220 lb/sq yd.
B	RECYCLED ASPH CONC 19 mm, SUPERPAVE, GP 1 OR 2, INCL BITUM MAT'L & H. LIME, 330 lb/sq yd.	J	PAVMT REINF FABRIC STRIPS, TP 2, 18 INCH
C	RECYCLED ASPH CONC 25 mm, SUPERPAVE, GP 1 OR 2, INCL BITUM MAT'L & H. LIME, 440 lb/sq yd.	K	GRADED AGGREGATE BASE COURSE, 6 INCH
D	GRADED AGGREGATE BASE COURSE, 12 INCH	L	CONC. MEDIAN, 4 INCH THK
E	CONC. CURB & GUTTER, 8" x 30", TP 7	M	GRADED AGGREGATE BASE COURSE, 14 INCH
F	CONC. CURB & GUTTER, 8" x 30", TP 2	N	7.5" CONC. MEDIAN W/TP 7 FACE
G	RECYCLED ASPH CONC 25 mm, SUPERPAVE, GP 1 OR 2, INCL BITUM MAT'L & H. LIME, 330 lb/sq yd.	O	6" CONC. MEDIAN W/TP 7 FACE
H	PLAIN PC CONC PVMT, CL 3 CONC, 9 INCH THK	P	MILL ASPH CONC PVMT, 1½IN DEPTH
		Q	RECYCLED ASPH CONC 12.5 mm, SUPERPAVE, GP 2 ONLY, INCL BITUM MAT'L & H. LIME, 165 lb/sq yd.

SLOPE CONTROLS*

SLOPE	CUT	FILL
4:1	——	0-10'
2:1	ALL	OVER 10'

*X-SECTS SUPERCEED SLOPE CONTROL BOX

GEORGIA
DEPARTMENT OF TRANSPORTATION

NOT TO SCALE

REVISION DATES

STATE OF GEORGIA
DEPARTMENT OF TRANSPORTATION
OFFICE: ROADWAY DESIGN

TYPICAL SECTIONS

I-285 AT SR155/FLAT SHOALS

DRAWING No. 5-03

1/5/2009 GPLN