STATE	PROJECT NUMBER	SHEET NO.	TOTAL SHEETS
GA.	BRZLB-0057-00(017)	38	107

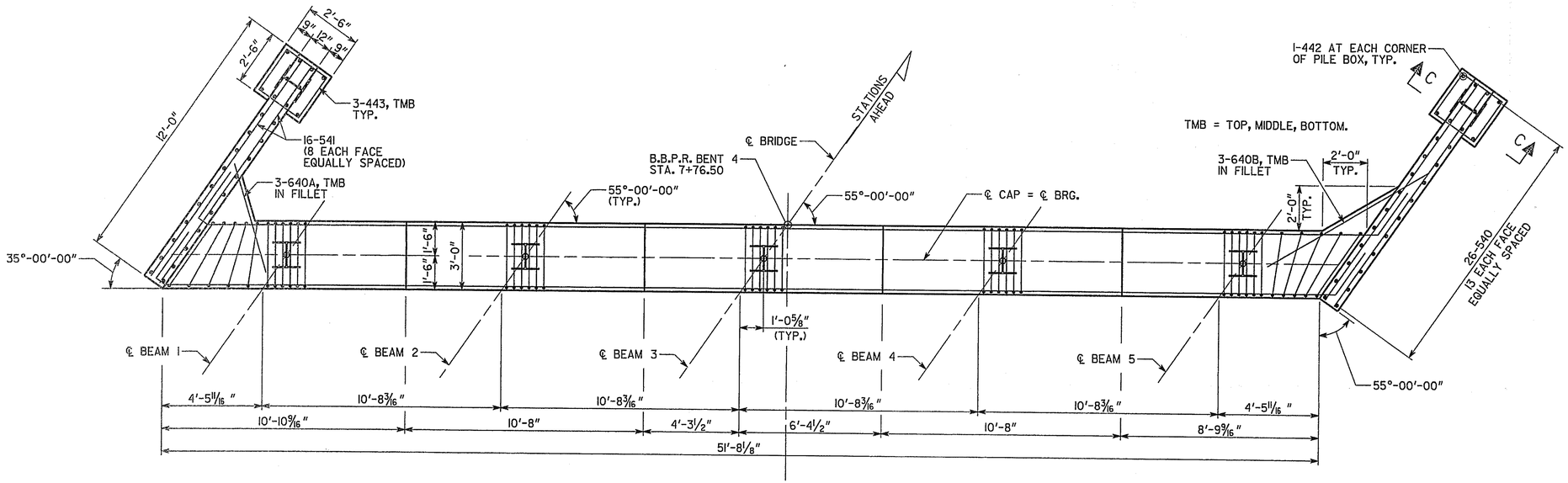

PLAN

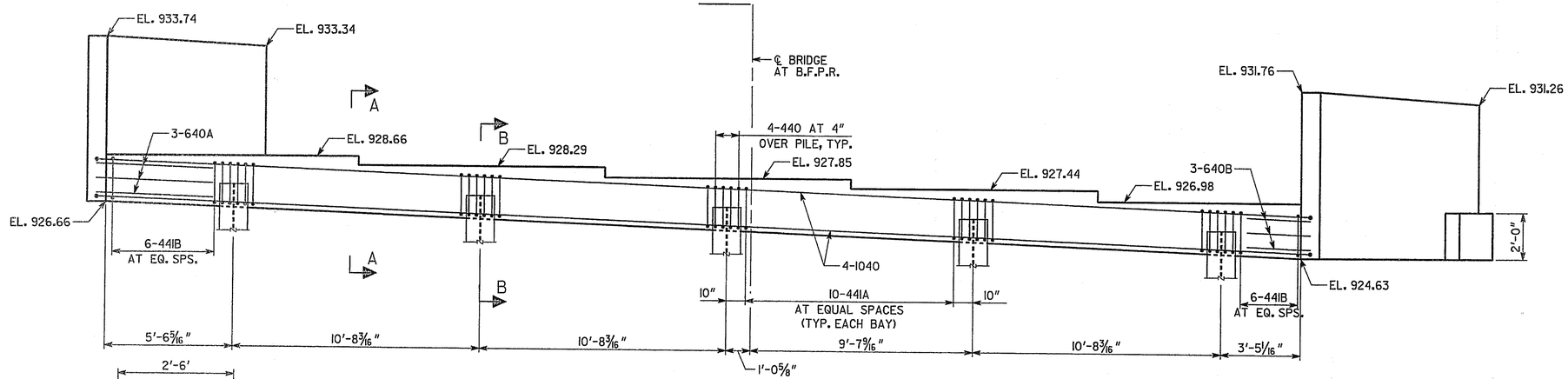

ELEVATION
(LOOKING AHEAD)
SCALE: ⅜" = 1'-0"

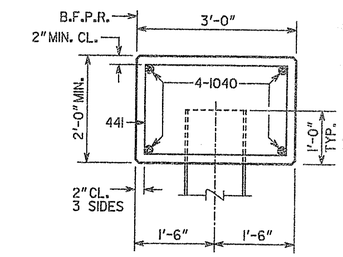

SECTION A-A
SCALE: ¾" = 1'-0"

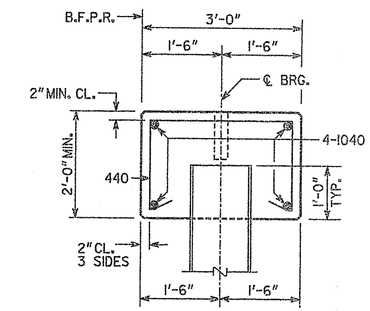

SECTION B-B
SCALE: ¾" = 1'-0"

PLAN DRIVING OBJECTIVE

DRIVE ALL PILES TO A DRIVING RESISTANCE OF 70 TONS AFTER A MINIMUM TIP ELEVATION OF 899 IS ACHIEVED.

ALL PILES SHALL BE STEEL H, HP 12 X 53.

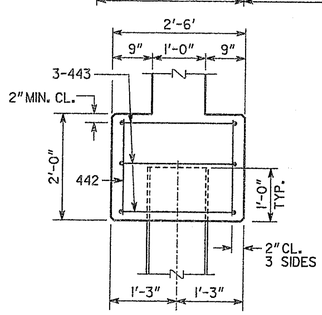

SECTION C-C
SCALE: ¾" = 1'-0"

SUBSTRUCTURE QUANTITIES	
ITEM	BENT 4
CY CLASS AA CONCRETE	19.2
LB BAR REINF STEEL	2,238

NOTES:

1. POUR WINGWALLS MONOLITHICALLY WITH CAP.
2. MAINTAIN 2" CLEARANCE ON ALL REINFORCEMENT UNLESS OTHERWISE NOTED.
3. SEE GA. STD. 9037 FOR DRAINAGE DETAILS AT END BENT.
4. WINGWALL PILES ARE NOT SHOWN IN ELEVATION.
5. BOTTOM OF WINGWALLS ARE LEVEL.

BRIDGE NO. 1

PARSONS
5390 TRIANGLE PARKWAY, SUITE 100
NORCROSS, GA 30092

GEORGIA
DEPARTMENT OF TRANSPORTATION
PRECONSTRUCTION DIVISION-OFFICE OF BRIDGE DESIGN

END BENT 4 DETAILS
CR 107 (HOWELL BRIDGE ROAD)
OVER SHARP MOUNTAIN CREEK
CHEROKEE COUNTY BRZLB-0057-00(017)

SCALE: AS SHOWN DECEMBER 2008

DATE	REVISIONS	BY

BRIDGE SHEET 15 OF 18

DESIGNED JCO	CHECKED TED	REVIEWED WEI/WMD
DRAWN EPR	DESIGN GROUP	APPROVED PVL